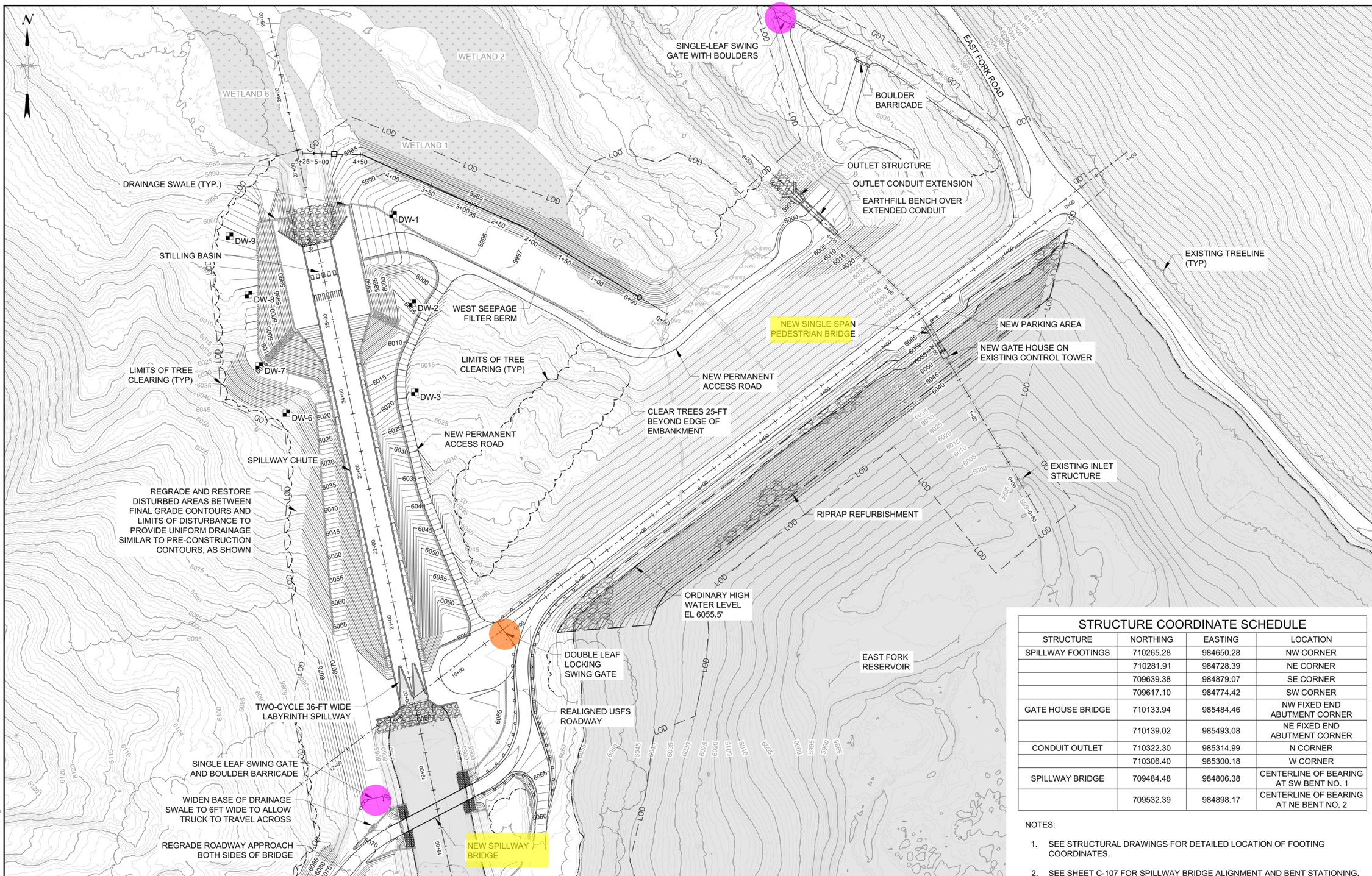

(1'-8' Dia. X 4'-0" H) Single Leaf Swig Gate Footing — 2.0 EA

(1'-8' Dia. X 4'-0" H) Double Leaf Swig Gate Footing — 1.0 EA

STRUCTURE COORDINATE SCHEDULE

STRUCTURE	NORTHING	EASTING	LOCATION
SPILLWAY FOOTINGS	710265.28	984650.28	NW CORNER
	710281.91	984728.39	NE CORNER
	709639.38	984879.07	SE CORNER
	709617.10	984774.42	SW CORNER
GATE HOUSE BRIDGE	710133.94	985484.46	NW FIXED END ABUTMENT CORNER
	710139.02	985493.08	NE FIXED END ABUTMENT CORNER
CONDUIT OUTLET	710322.30	985314.99	N CORNER
	710306.40	985300.18	W CORNER
SPILLWAY BRIDGE	709484.48	984806.38	CENTERLINE OF BEARING AT SW BENT NO. 1
	709532.39	984898.17	CENTERLINE OF BEARING AT NE BENT NO. 2

NOTES:

1. SEE STRUCTURAL DRAWINGS FOR DETAILED LOCATION OF FOOTING COORDINATES.
2. SEE SHEET C-107 FOR SPILLWAY BRIDGE ALIGNMENT AND BENT STATIONING.
3. INSTRUMENTATION NOT SHOWN. REFER TO SHEET C-501.

0 60 120 180 FT

SCALE: 1"=60'

ISSUED FOR BID
NOT FOR CONSTRUCTION

REV.	DESCRIPTION	DATE

DESIGNED BY: BPT
DRAWN BY: BJY
CHECKED BY: TJF

THOMAS J. FITZGERALD, PE
DATE: 2/19/2024
MT PROFESSIONAL ENGINEER NO. 48689

MONTANA THOMAS JEROME FITZGERALD No. 48689 PE LICENSED PROFESSIONAL ENGINEER

Schnabel ENGINEERING
348 W Parkcenter Blvd, Suite 200 / Boise, Id 83706
Phone: 208-331-9736
schnabel-eng.com

EAST FORK OF ROCK CREEK DAM REHABILITATION
MONTANA DEPARTMENT OF NATURAL RESOURCES & CONSERVATION
GRANITE COUNTY, MONTANA

PROPOSED SITE PLAN

MONTANA DNRC

PROJECT: 22270012.000
DATE: 4/1/2024
DRAWING NO. C-100
SHEET 13 OF 102

Q:\BOISE\2022\22270012.000_EFRC DAM REHAB\03-SE PRODUCTS\08-CAD\CIVIC-100.DWG

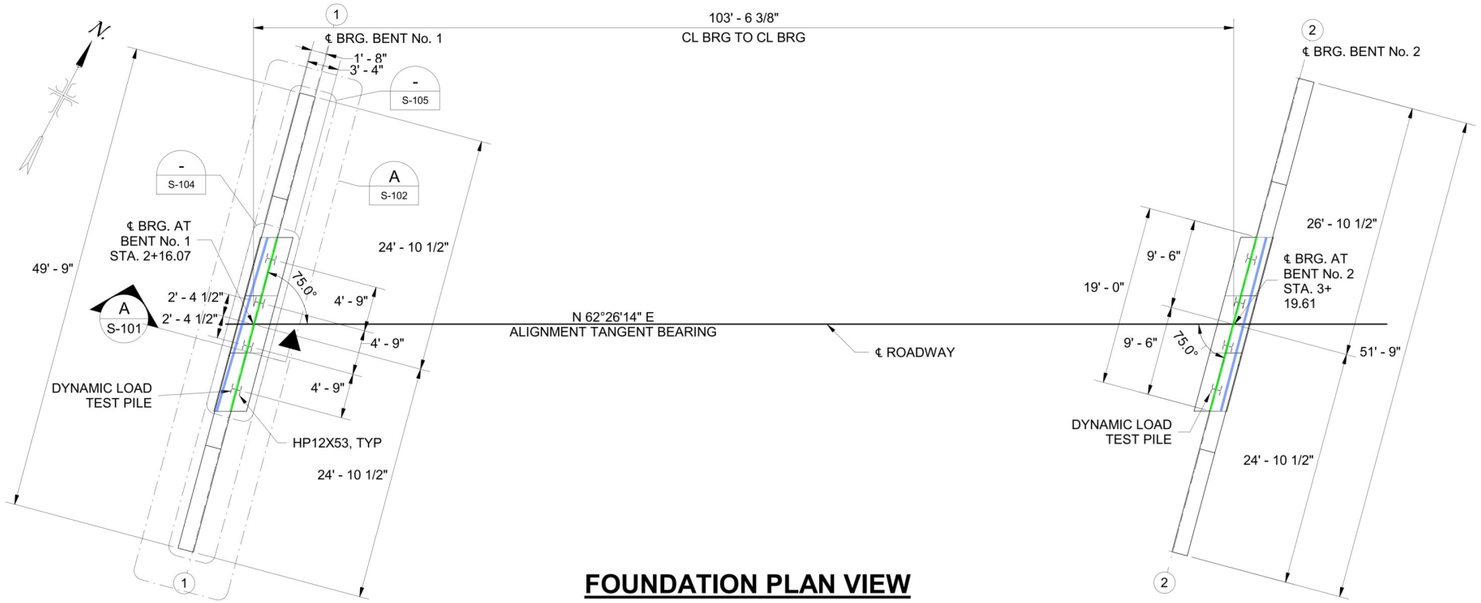

FOUNDATION PLAN VIEW

5 0 5 10 15 20
scale 1/8" = 1' - 0" feet

PILE NOTES:
1. SEE STD. DWG. PSD (SEE SHT. S-106) FOR H-PILE SPLICE AND TIP DETAILS.

PILE INFORMATION

LOCATION	DESIGN PILE TIP ELEVATION	PILE TIP TREATMENT	REQUIRED BEARING RESISTANCE DURING DRIVING (KIP)	MAXIMUM PILE REACTION UNDER SERVICE 1 (KIP)
BENT No. 1	6015.0	DRIVING POINT	342	154
BENT No. 2	6015.0	DRIVING POINT	342	154

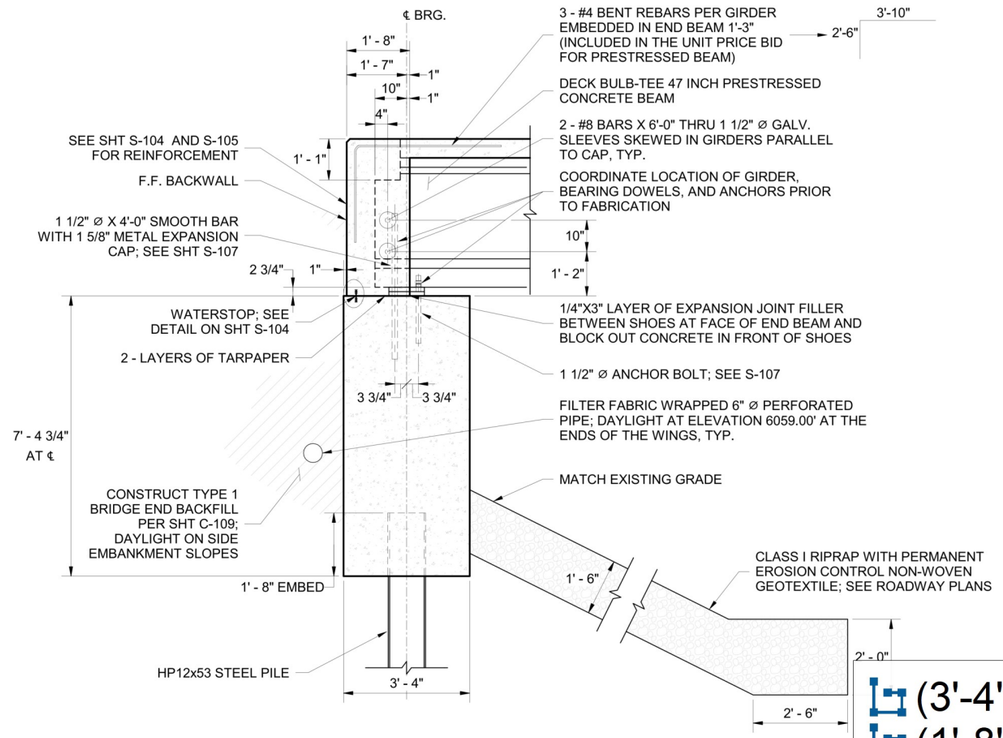

SECTION A S-101
SCALE: 1/2" = 1'-0"

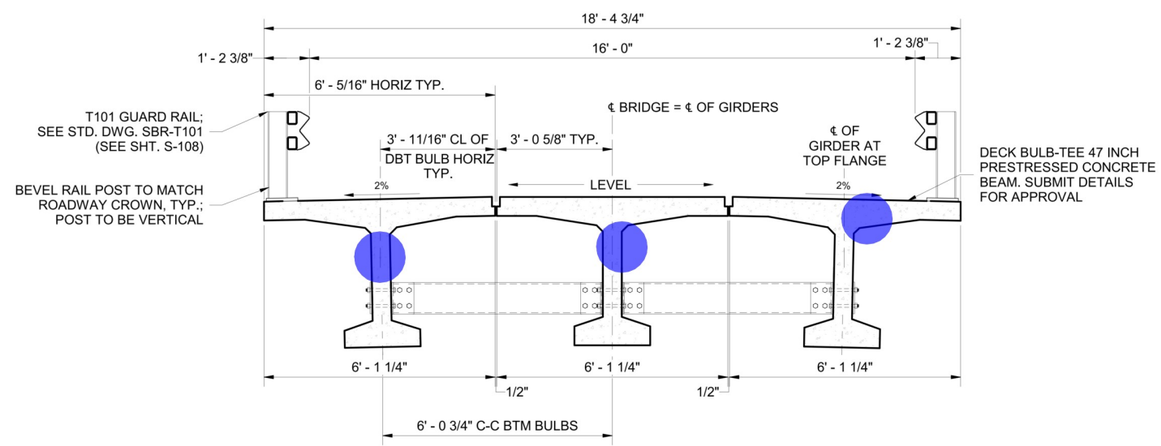

BRIDGE TYPICAL SECTION
scale 1/2" = 1' - 0" feet

(3'-4" W x7'-4-3/4" H) Pile Cap Beam — 37.9 FT
(1'-8" W x4'-0" H) End Beam — 38.1 FT
Deck Bulb-Tee 47" Prestressed Concrete Beam — 3.0 EA

PLANS PREPARED USING
THE PROJECT DATUM
(NAVD 88 - 7.8FT)

ISSUED FOR BID
NOT FOR CONSTRUCTION

REV.	DESCRIPTION	DATE

DESIGNED BY: PGS
DRAWN BY: VJG
CHECKED BY: MJM

PETE SLOCUM, PE
Pete Slocum DATE: 3/13/2024
MT PROFESSIONAL ENGINEER NO. 62479

MONTANA PETER G. SLOCUM NO. 62479 PE LICENSED PROFESSIONAL ENGINEER

DOWL
www.dowl.com
222 N. 32nd Street, #700
Billings, Montana 59101
406-656-6399

EAST FORK OF ROCK CREEK DAM
REHABILITATION
MONTANA DEPARTMENT OF
NATURAL RESOURCES & CONSERVATION
GRANITE COUNTY, MONTANA

SPILLWAY CHANNEL BRIDGE -
FOUNDATION PLAN

MTNRC

22270012.000
4/01/2024
DRAWING NO.
101
SHEET
61 of 102

R:\d0406745\MR-ST-21937-01_EastFork.rvt
3/12/2024 1:43:30 PM

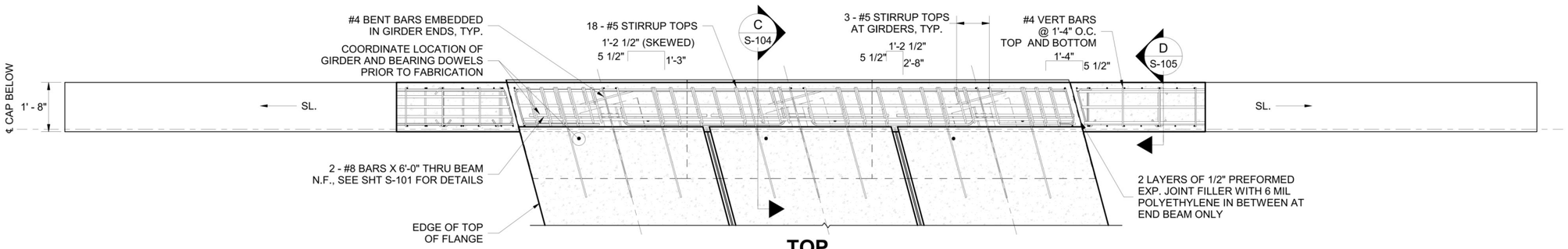

TOP

scale 1/2" = 1' - 0" feet

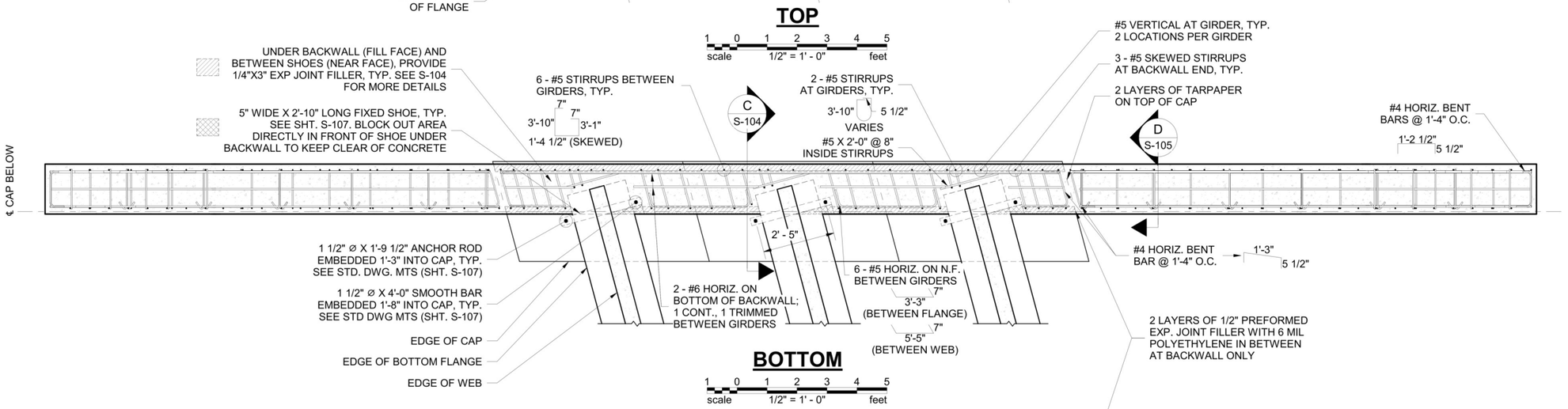

BOTTOM

scale 1/2" = 1' - 0" feet

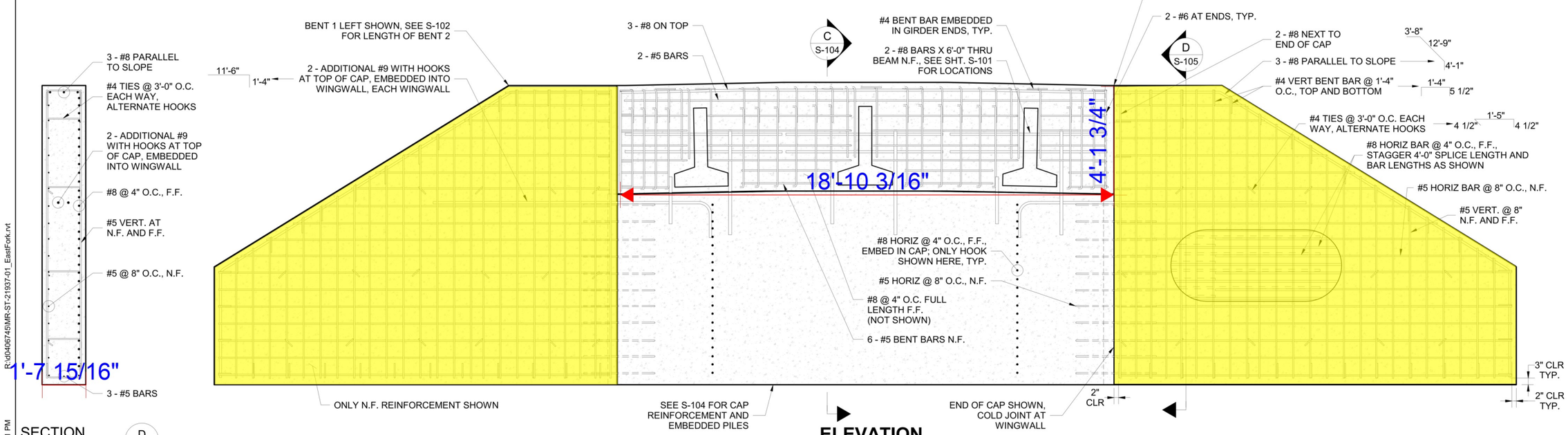

SECTION D S-105

SCALE: 1/2" = 1'-0"

ELEVATION

-BENT NO. 1 FACE SHOWN BOL
(BENT NO. 2 AOL SIMILAR EXCEPT AS NOTED)

scale 1/2" = 1' - 0" feet

1'-8" Thk. Wing Wall 272.5 SQ FT

ISSUED FOR BID
NOT FOR CONSTRUCTION

REV.	DESCRIPTION	DATE

DESIGNED BY: PGS
DRAWN BY: VJG
CHECKED BY: MJM

PETE SLOCUM, PE
Pete Slocum DATE: 3/13/2024
MT PROFESSIONAL ENGINEER NO. 62479

MONTANA PETER G. SLOCUM NO. 62479 PE LICENSED PROFESSIONAL ENGINEER

DOWL
www.dowl.com
222 N. 32nd Street, #700
Billings, Montana 59101
406-656-6399

EAST FORK OF ROCK CREEK DAM REHABILITATION
MONTANA DEPARTMENT OF NATURAL RESOURCES & CONSERVATION
GRANITE COUNTY, MONTANA

BENT NO. 1 BACKWALL AND WINGWALLS REINFORCEMENT

MONTANA DNRC

PROJECT: 22270012.000
DATE: 04/01/2024
DRAWING NO. S-105
SHEET 65 of 102

R:\d0406745\MR-ST-21937-01_EastFork.rvt
3/12/2024 12:10:41 PM

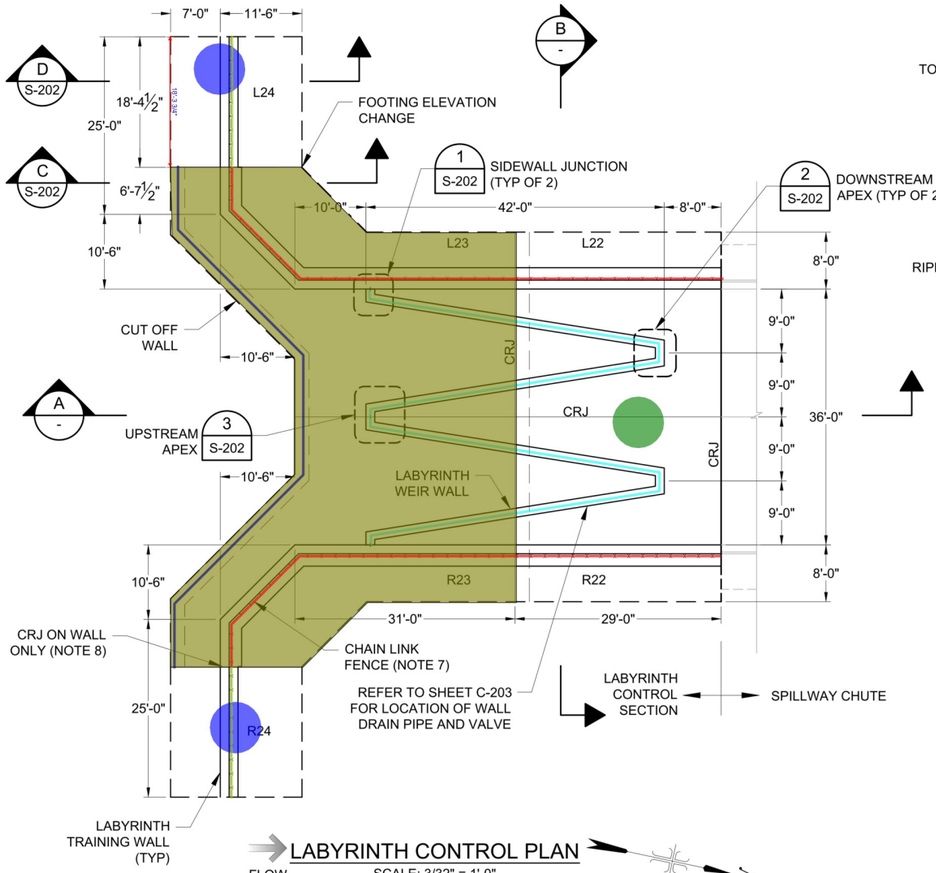

LABYRINTH CONTROL PLAN

SCALE: 3/32" = 1'-0"

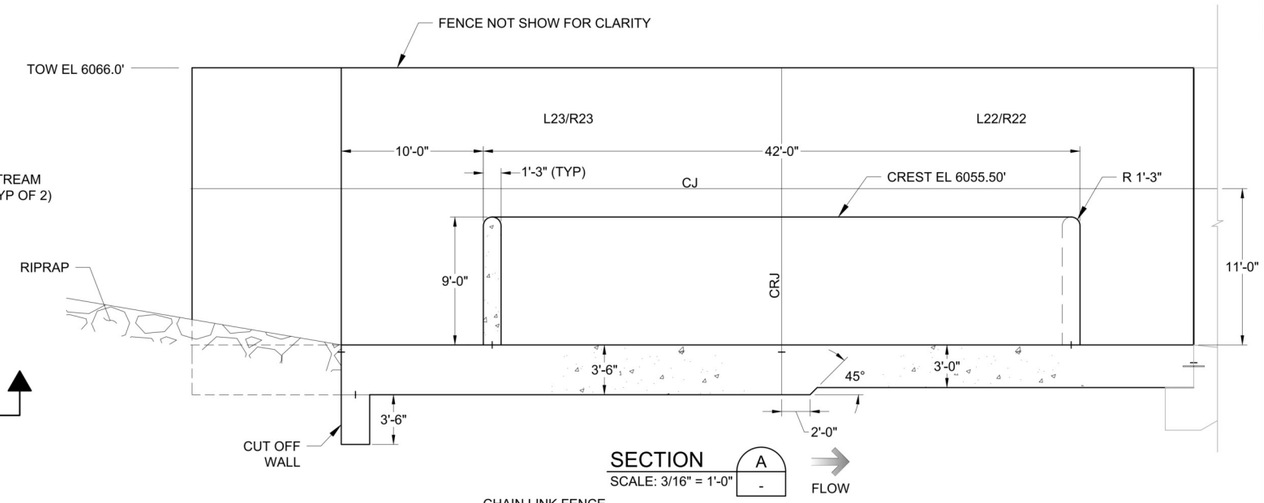

SECTION A

SCALE: 3/16" = 1'-0"

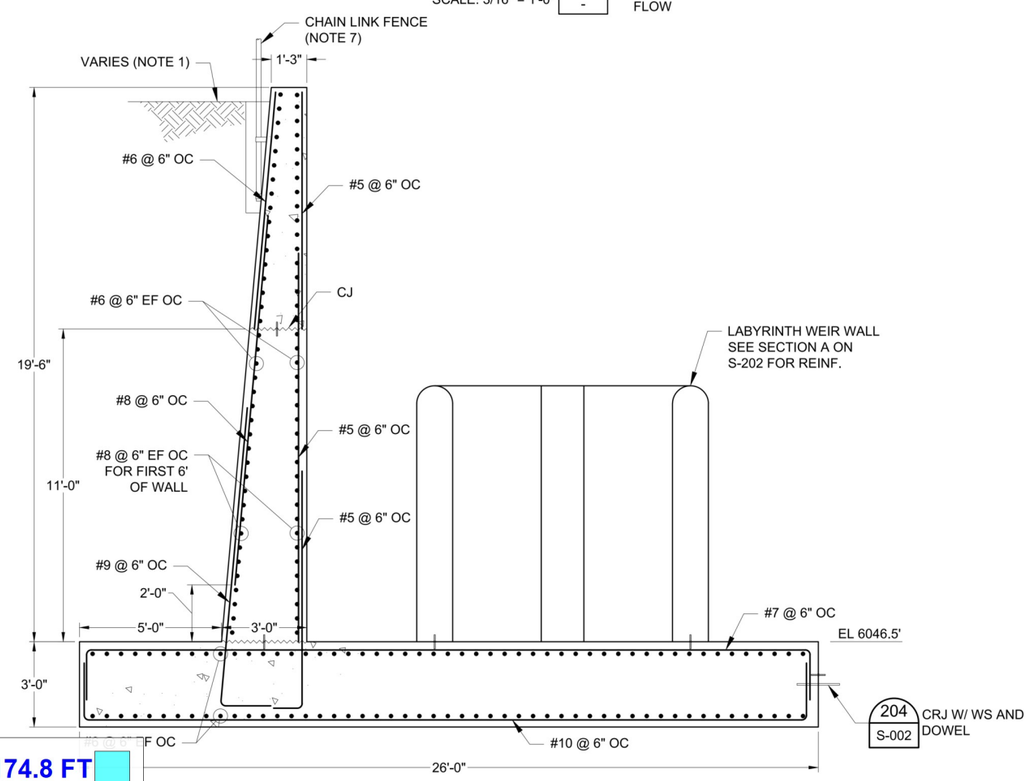

L22/R22 WALL SECTION

SCALE: 3/8" = 1'-0"

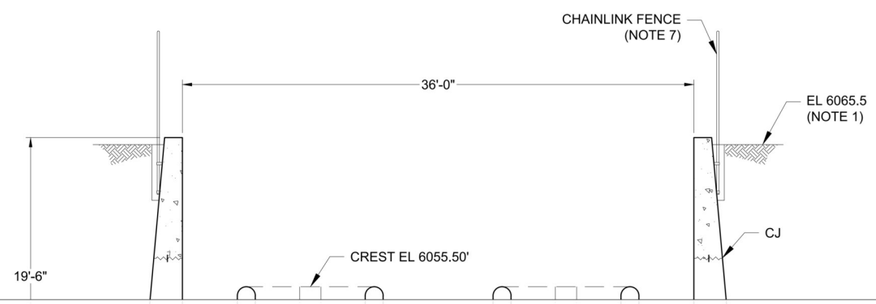

- (1'-3" Thk. x 9'-0' H) Labyrinth Weir Wal — 174.8 FT
- (52' X 29' X 3') Concrete Slab-L22 — 1.0 EA
- (18'-6" X 18'-4 X 2'-6") Concrete Slab-L24 — 2.0 EA
- (3'-6" Deep) Slab-L23 — 2365.3 SQ FT
- (2'-0" W X 3'-6" H) Concrete Key — 85.5 FT
- 3'-0" Thk. Retaining Wall (19'-6" H) (42 SF)-L22, 23 — 158.0 FT
- 2'-6" Thk. Retaining Wall (14'-0" H) (26 SF) L-24 — 37.0 FT

NOTES:

1. REFER TO C-200 FOR GR… RUCTURES.
2. COORDINATE DRAINAGE … TIONS WITH SHEET C-203 AND C-204.
3. FOR REINFORCEMENT L… OK LENGTHS REFER TO DETAIL 217 ON SHEET S-003.
4. REFER TO … VERTICAL CONSTRUCTION JOINT DETAILS.
5. REFER TO DETAIL 204 … R CONTRACTION JOINT DETAILS.
6. REFER TO CIVIL SHEET … COORDINATES.
7. REFER TO C-112 FO… TAILS.
8. SEALANT JOINT NOT R… THIS LOCATION.

ISSUED FOR BID
NOT FOR CONSTRUCTION

DATE	DESCRIPTION	REV.

DESIGNED BY: SND
DRAWN BY: ELR
CHECKED BY: TJF

THOMAS J. FITZGERALD, PE
DATE: 3/19/2024
MT PROFESSIONAL ENGINEER NO. 48689

MONTANA PROFESSIONAL ENGINEER THOMAS JEROME FITZGERALD No. 48689 PE

Schnabel ENGINEERING
348 W Parkcenter Blvd, Suite 200 / Boise, Id 83706
Phone: 208-331-9736
schnabel-eng.com

EAST FORK OF ROCK CREEK DAM REHABILITATION
MONTANA DEPARTMENT OF NATURAL RESOURCES & CONSERVATION
GRANITE COUNTY, MONTANA

LABYRINTH CONTROL PLAN & SECTIONS

MONTANA DNRC

PROJECT: 22270012.000
DATE: 4/1/2024
DRAWING NO. S-201
SHEET 72 OF 102

O:\BOISE\2022\22270012.000_EFRC DAM REHAB\03-SE PRODUCTS\08-CAD\STRS-201.DWG
3/18/2024 2:45 PM

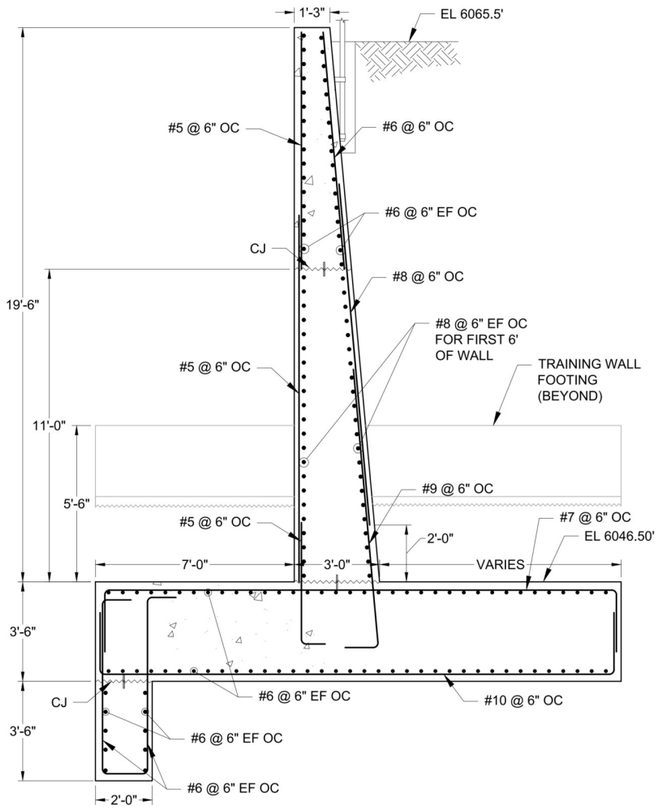

SECTION C S-201
SCALE: 3/8" = 1'-0"
(L23/R23)

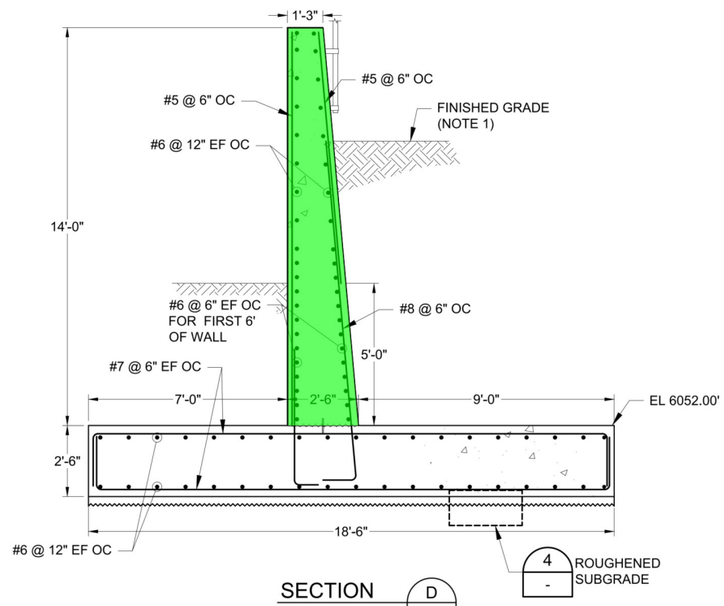

SECTION D S-201
SCALE: 3/8" = 1'-0"
(L24/R24)

NOTES:

1. REFER TO C-200 FOR GRADING AROUND STRUCTURES.
2. FOR REINFORCEMENT LAP, SPLICE, AND HOOK LENGTHS REFER TO DETAIL 217 ON SHEET S-003.
3. FENCE NOT SHOWN FOR CLARITY. REFER TO C-112 FOR CHAIN LINK FENCE DETAILS.

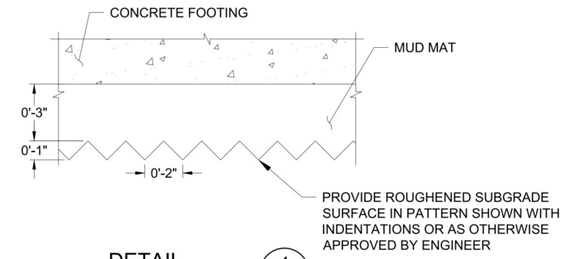

DETAIL 4 -
SCALE: 3" = 1'-0"

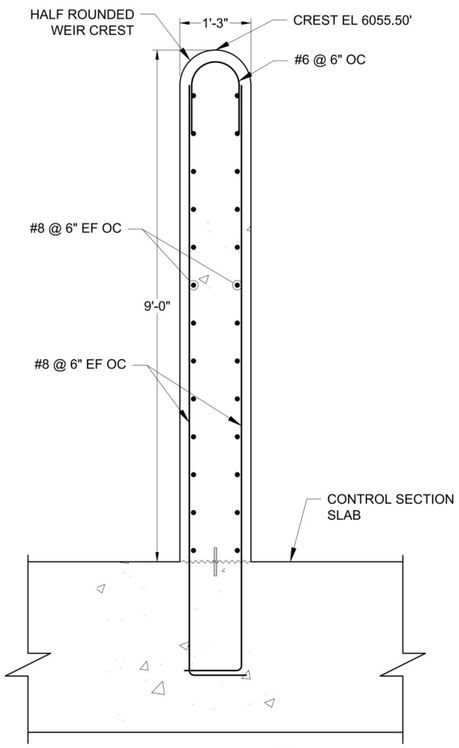

SECTION A -
SCALE: 3/4" = 1'-0"

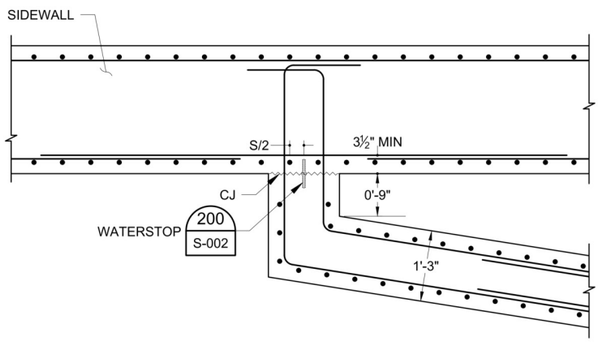

DETAIL 1 S-201
SCALE: 3/4" = 1'-0"
(SIDEWALL JUNCTION)

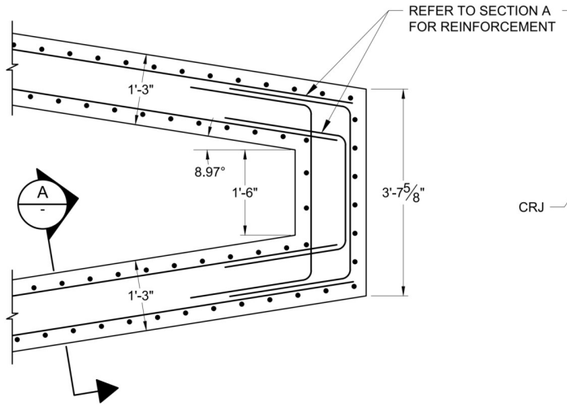

DETAIL 2 S-201
SCALE: 3/4" = 1'-0"
(DOWNSTREAM APEX)

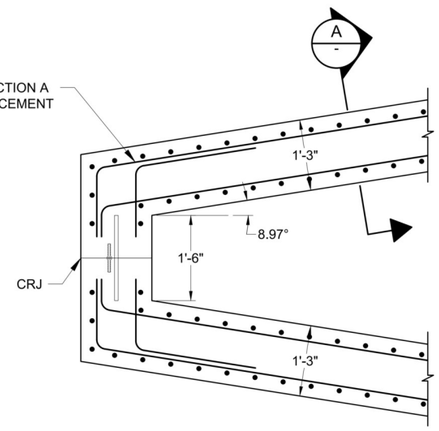

DETAIL 3 S-201
SCALE: 3/4" = 1'-0"
(UPSTREAM APEX)

Area 26.1 SQ FT

ISSUED FOR BID
NOT FOR CONSTRUCTION

REV.	DESCRIPTION	DATE

DESIGNED BY: BPT
DRAWN BY: BJY
CHECKED BY: TJF

THOMAS J. FITZGERALD, PE
DATE: 3/19/2024
MT PROFESSIONAL ENGINEER NO. 48689

MONTANA THOMAS JEROME FITZGERALD No. 48689 PE LICENSED PROFESSIONAL ENGINEER

Schnabel ENGINEERING
348 W Parkcenter Blvd, Suite 200 / Boise, Id 83706
Phone: 208-331-9736
schnabel-eng.com

EAST FORK OF ROCK CREEK DAM REHABILITATION
MONTANA DEPARTMENT OF
NATURAL RESOURCES & CONSERVATION
GRANITE COUNTY, MONTANA

LABYRINTH WEIR DETAILS - I

MONTANA DNRC

PROJECT: 22270012.000
DATE: 4/1/2024
DRAWING NO. S-202
SHEET 73 OF 102

O:\BOISE\2022\22270012.000_EFRC DAM REHAB\03-SE PRODUCTS\08-CAD\STRS-202.DWG
3/18/2024 2:46 PM

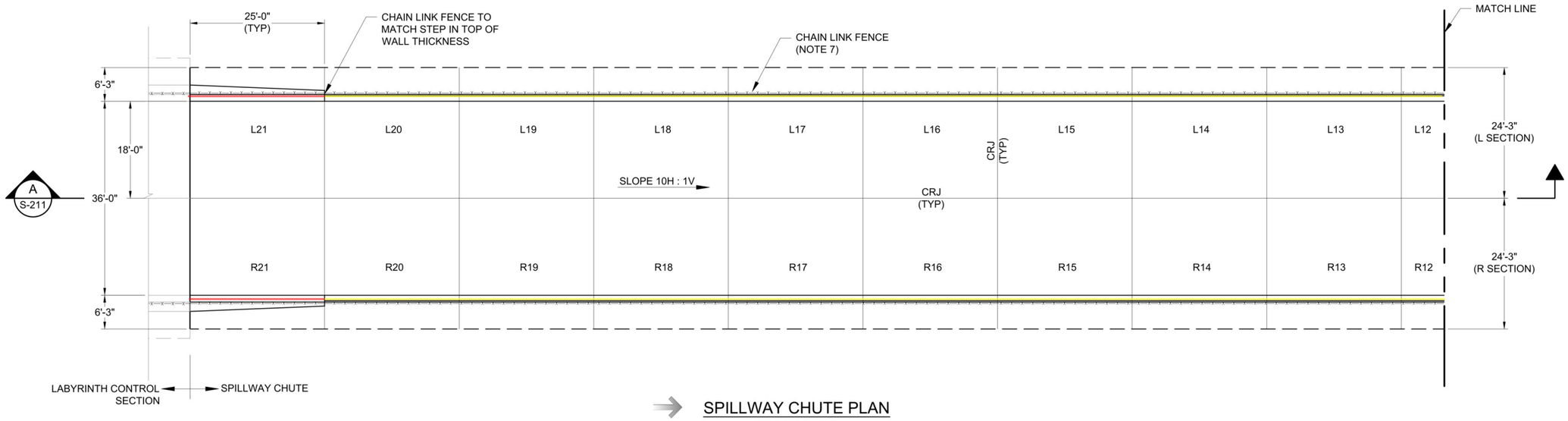

SPILLWAY CHUTE PLAN

SCALE: 3/32" = 1'-0"

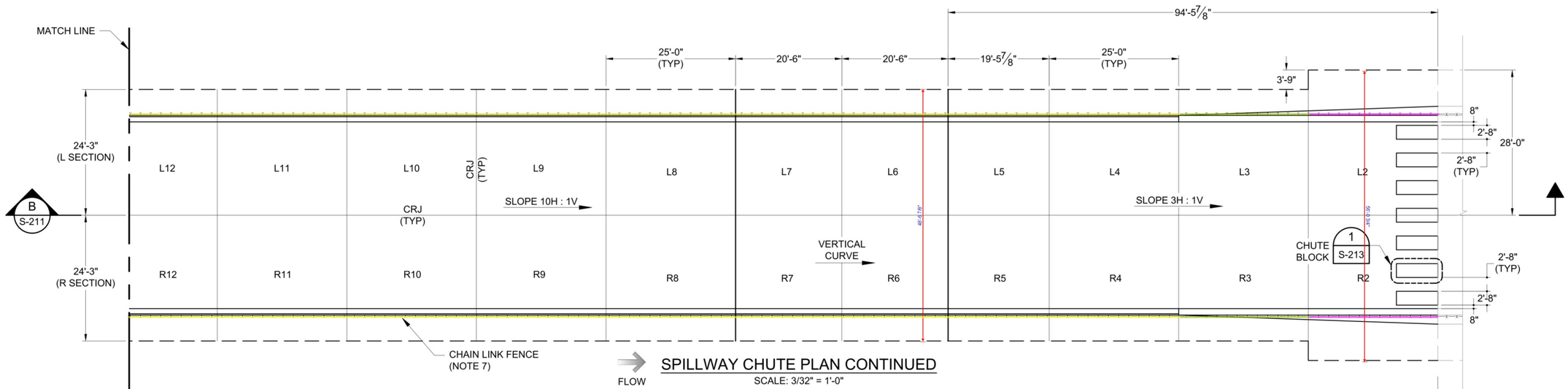

SPILLWAY CHUTE PLAN CONTINUED

SCALE: 3/32" = 1'-0"

NOTES:

1. CHUTE SECTIONS ARE LABELED F
2. POSITIONS ARE LABELED LOOKING
3. L = LEFT CHUTE SECTION, R = RIG
4. REFER TO C-200 FOR GRADING A
5. COORDINATE DRAINAGE AND PIP
6. REFER TO S-212 THROUGH S-215 F
7. REFER TO C-112 FOR CHAIN LINK FENCE DETAILS.

3'-0" Thk. Retaining Wall (19'-0" H) (38 SF)-L2	50.0 FT
3'-0" Thk. Retaining Wall (11'-0" H) (21 SF)-L3	49.9 FT
1'-3" Thk. Retaining Wall (10'-0" H) (12 SF)-L4 to 20	821.0 FT
2'-6" Thk. Retaining Wall (14'-6" H) (28 SF)-L21	50.6 FT

ISSUED FOR BID
NOT FOR CONSTRUCTION

REV.	DESCRIPTION	DATE

DESIGNED BY: SND
DRAWN BY: ELR
CHECKED BY: TJF

THOMAS J. FITZGERALD, PE
DATE: 3/19/2024
MT PROFESSIONAL ENGINEER NO. 48689

MONTANA THOMAS JEROME FITZGERALD No. 48689 PE LICENSED PROFESSIONAL ENGINEER

Schnabel ENGINEERING
348 W Parkcenter Blvd, Suite 200 / Boise, Id 83706
Phone: 208-331-9736
schnabel-eng.com

EAST FORK OF ROCK CREEK DAM REHABILITATION
MONTANA DEPARTMENT OF
NATURAL RESOURCES & CONSERVATION
GRANITE COUNTY, MONTANA

SPILLWAY CHUTE PLANS

MONTANA DNRC

PROJECT: 22270012.000
DATE: 4/1/2024
DRAWING NO. S-210
SHEET 75 OF 102

O:\BOISE\2022\22270012.000_EFRC DAM REHAB\03-SE PRODUCTS\08-CAD\STR\S-210.DWG
3/18/2024 2:46 PM

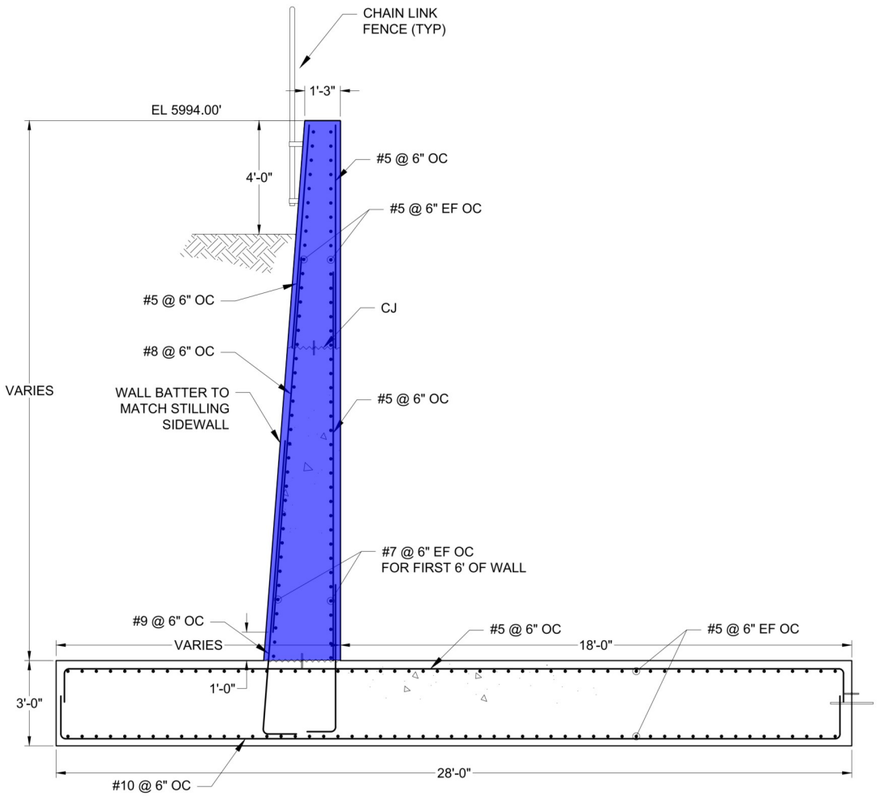

L2/R2 WALL SECTION

SCALE: ⅜" = 1'-0"

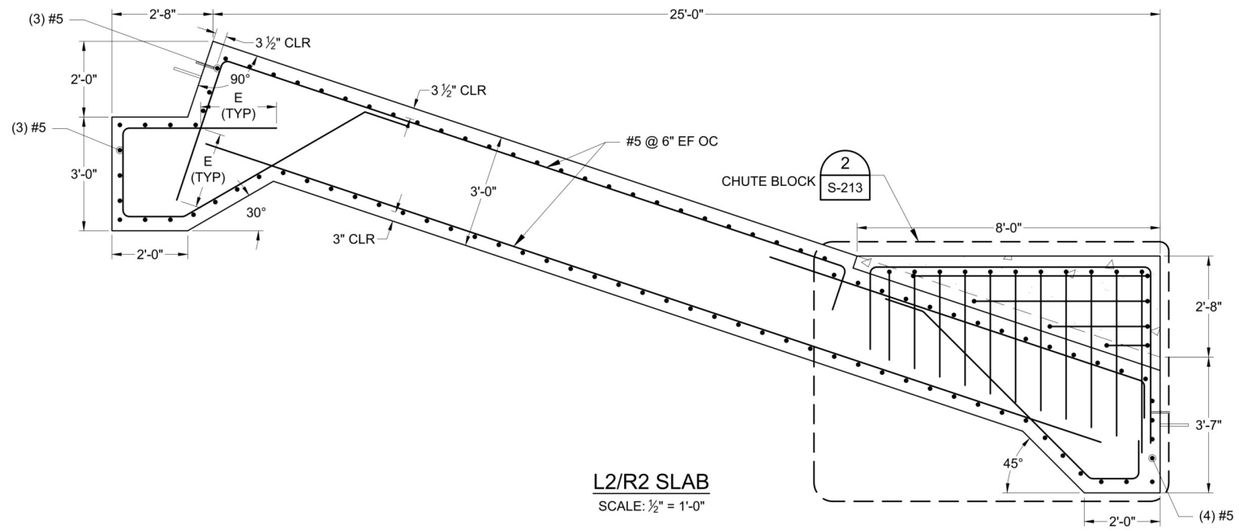

L2/R2 SLAB

SCALE: ½" = 1'-0"

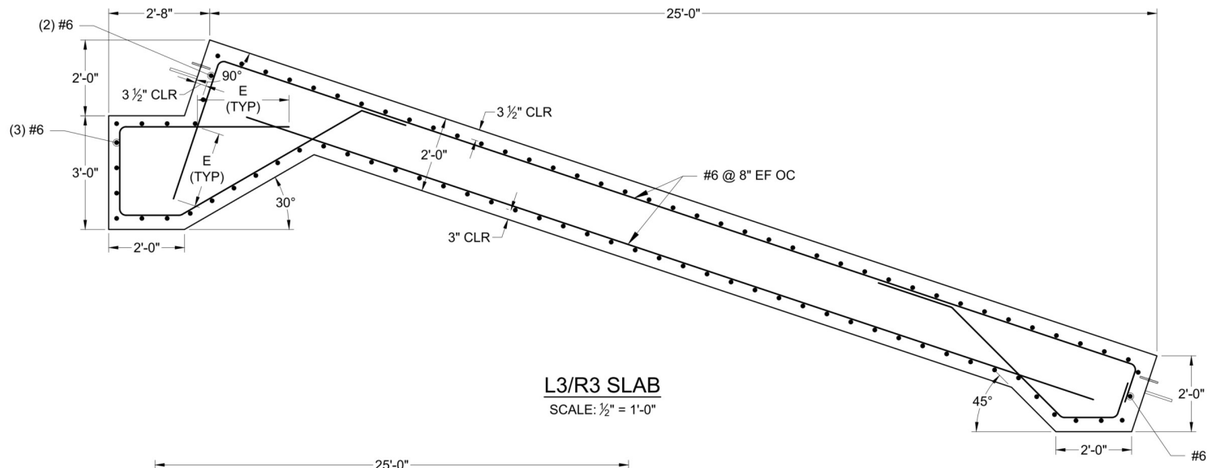

L3/R3 SLAB

SCALE: ½" = 1'-0"

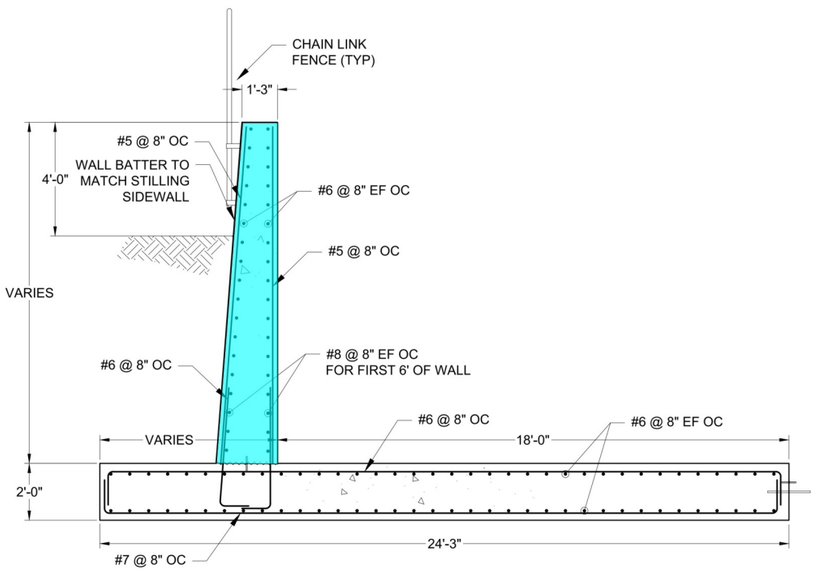

L3/R3 WALL SECTION

SCALE: ⅜" = 1'-0"

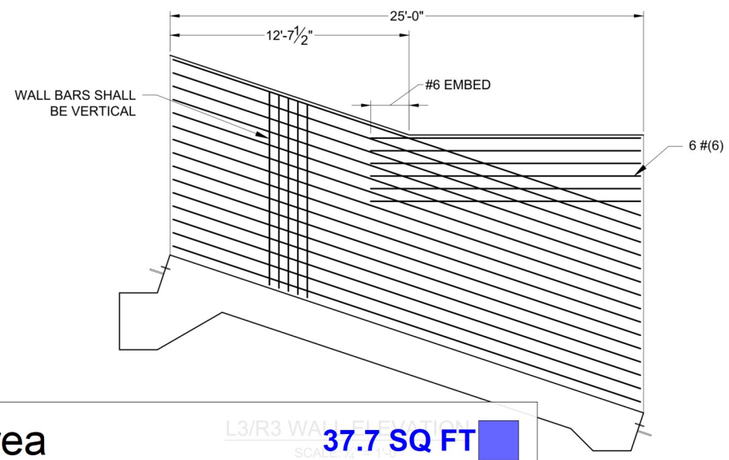

L3/R3 WALL ELEVATION

SCALE: ½" = 1'-0"

NOTES:

1. (E = EMBEDMENT DEPTH) REFER TO DETAIL 217 ON SHEET S-003 FOR BAR SCHEDULE.
2. REFER TO DETAILS 204 AND 205 ON SHEET S-003 FOR CONTRACTION JOINT DETAILS. INCLUDE SEALANT JOINTS.
3. REFER TO C-112 FOR CHAIN LINK FENCE DETAILS.
4. REFER TO C-200 FOR GRADING AROUND STRUCTURES.

Area 37.7 SQ FT

Area 20.4 SQ FT

ISSUED FOR BID
NOT FOR CONSTRUCTION

REV.	DESCRIPTION	DATE

DESIGNED BY: SND
DRAWN BY: ELR
CHECKED BY: TJF

THOMAS J. FITZGERALD, PE
DATE: 3/19/2024
MT PROFESSIONAL ENGINEER NO. 48689

MONTANA THOMAS JEROME FITZGERALD No. 48689 PE PROFESSIONAL ENGINEER

Schnabel ENGINEERING
348 W Parkcenter Blvd, Suite 200 / Boise, Id 83706
Phone: 208-331-9736
schnabel-eng.com

EAST FORK OF ROCK CREEK DAM REHABILITATION
MONTANA DEPARTMENT OF NATURAL RESOURCES & CONSERVATION
GRANITE COUNTY, MONTANA

L2-R2 AND L3-R3 SLAB & WALL DETAILS

MONTANA DNRC

PROJECT: 22270012.000
DATE: 4/1/2024
DRAWING NO. S-212
SHEET 77 OF 102

O:\BOISE\2022\22270012.000_EFRC DAM REHAB\03-SE PRODUCTS\08-CAD\STRS-212.DWG
3/18/2024 2:47 PM

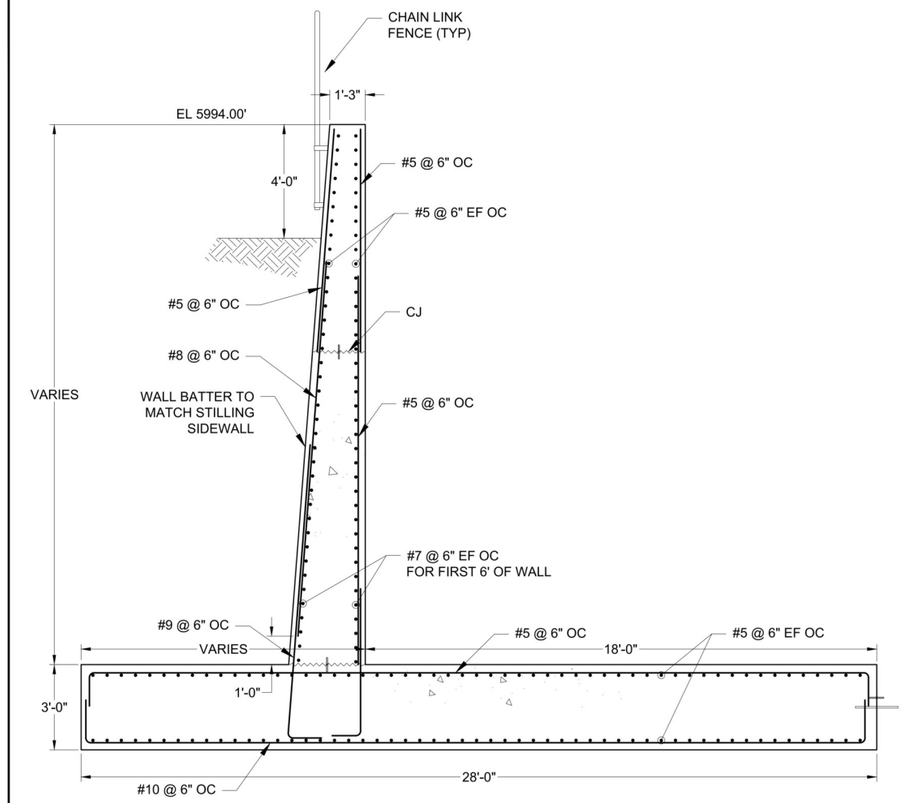

L2/R2 WALL SECTION

SCALE: ⅜" = 1'-0"

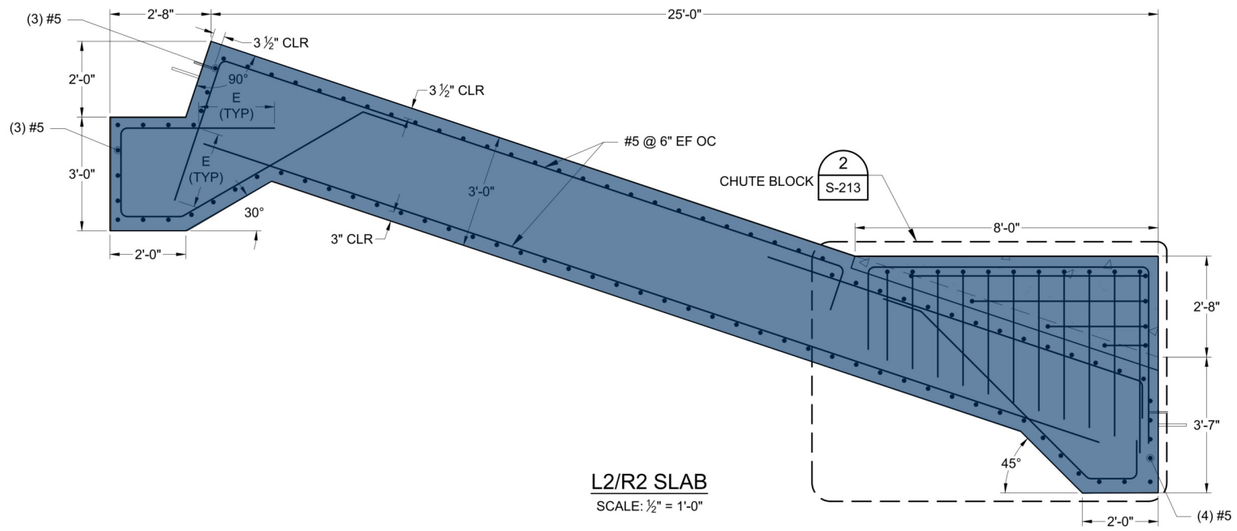

L2/R2 SLAB

SCALE: ½" = 1'-0"

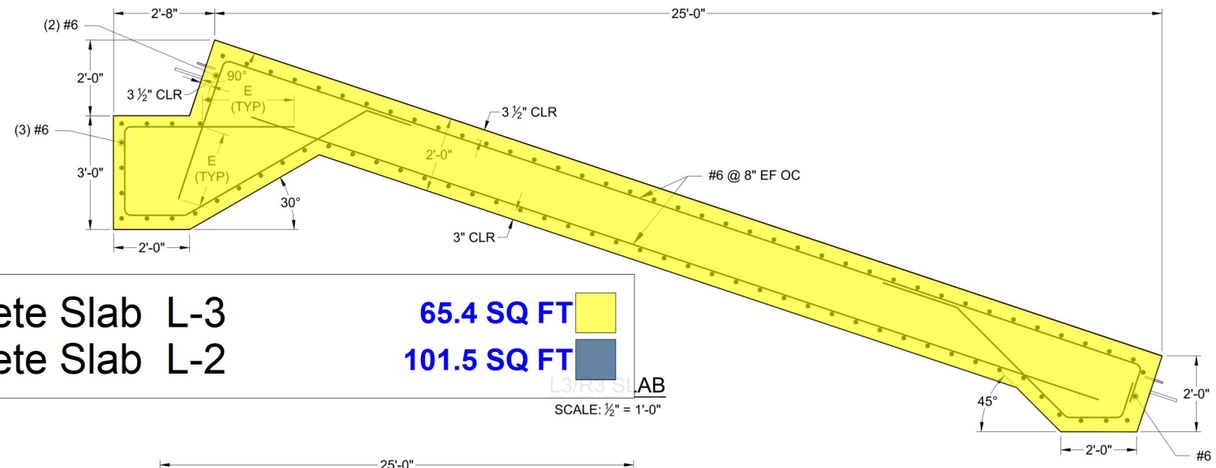

L3/R3 SLAB

SCALE: ½" = 1'-0"

2'-0" Thk X 48'-6" Wide Concrete Slab L-3 — 65.4 SQ FT

3'-0" Thk X 48'-6" Wide Concrete Slab L-2 — 101.5 SQ FT

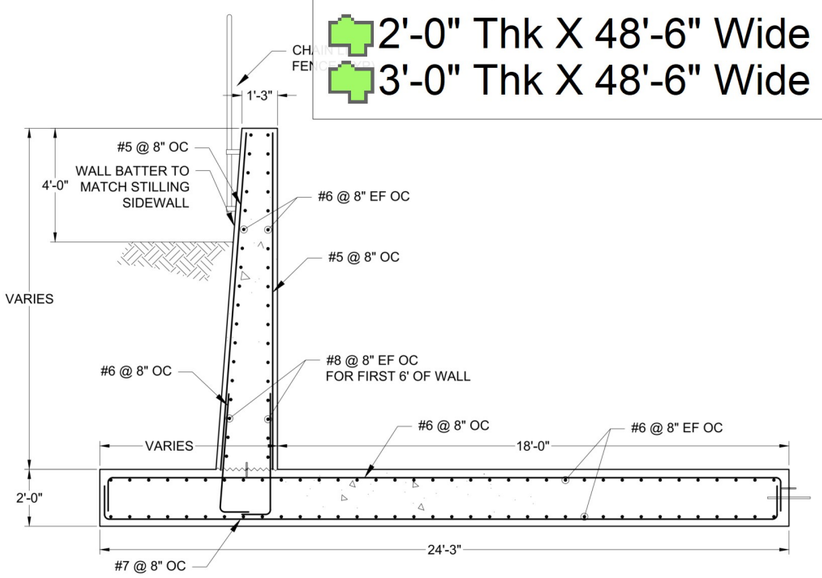

L3/R3 WALL SECTION

SCALE: ⅜" = 1'-0"

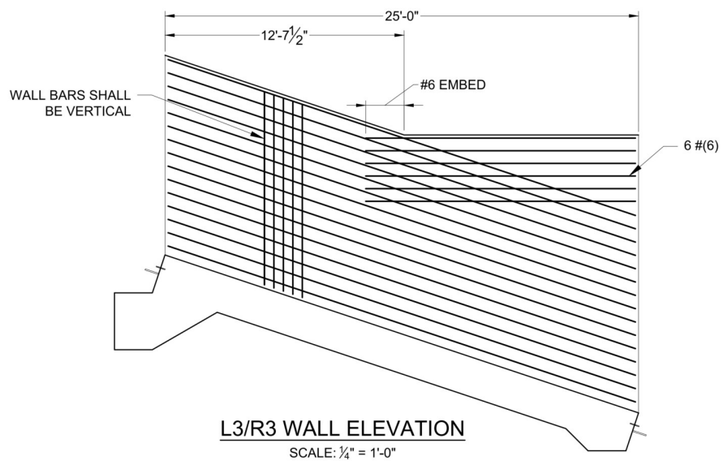

L3/R3 WALL ELEVATION

SCALE: ¼" = 1'-0"

NOTES:

1. (E = EMBEDMENT DEPTH) REFER TO DETAIL 217 ON SHEET S-003 FOR BAR SCHEDULE.
2. REFER TO DETAILS 204 AND 205 ON SHEET S-003 FOR CONTRACTION JOINT DETAILS. INCLUDE SEALANT JOINTS.
3. REFER TO C-112 FOR CHAIN LINK FENCE DETAILS.
4. REFER TO C-200 FOR GRADING AROUND STRUCTURES.

ISSUED FOR BID
NOT FOR CONSTRUCTION

REV.	DESCRIPTION	DATE

DESIGNED BY: SND | DRAWN BY: ELR | CHECKED BY: TJF

THOMAS J. FITZGERALD, PE
DATE: 3/19/2024
MT PROFESSIONAL ENGINEER NO. 48689

MONTANA PROFESSIONAL ENGINEER THOMAS JEROME FITZGERALD No. 48689 PE

Schnabel ENGINEERING
348 W Parkcenter Blvd, Suite 200 / Boise, Id 83706
Phone: 208-331-9736
schnabel-eng.com

EAST FORK OF ROCK CREEK DAM REHABILITATION
MONTANA DEPARTMENT OF NATURAL RESOURCES & CONSERVATION
GRANITE COUNTY, MONTANA

L2-R2 AND L3-R3 SLAB & WALL DETAILS

MONTANA DNRC

PROJECT: 22270012.000
DATE: 4/1/2024
DRAWING NO. S-212
SHEET 77 OF 102

O:\BOISE\2022\22270012.000_EFRC DAM REHAB\03-SE PRODUCTS\08-CAD\STRS-212.DWG
3/18/2024 2:47 PM

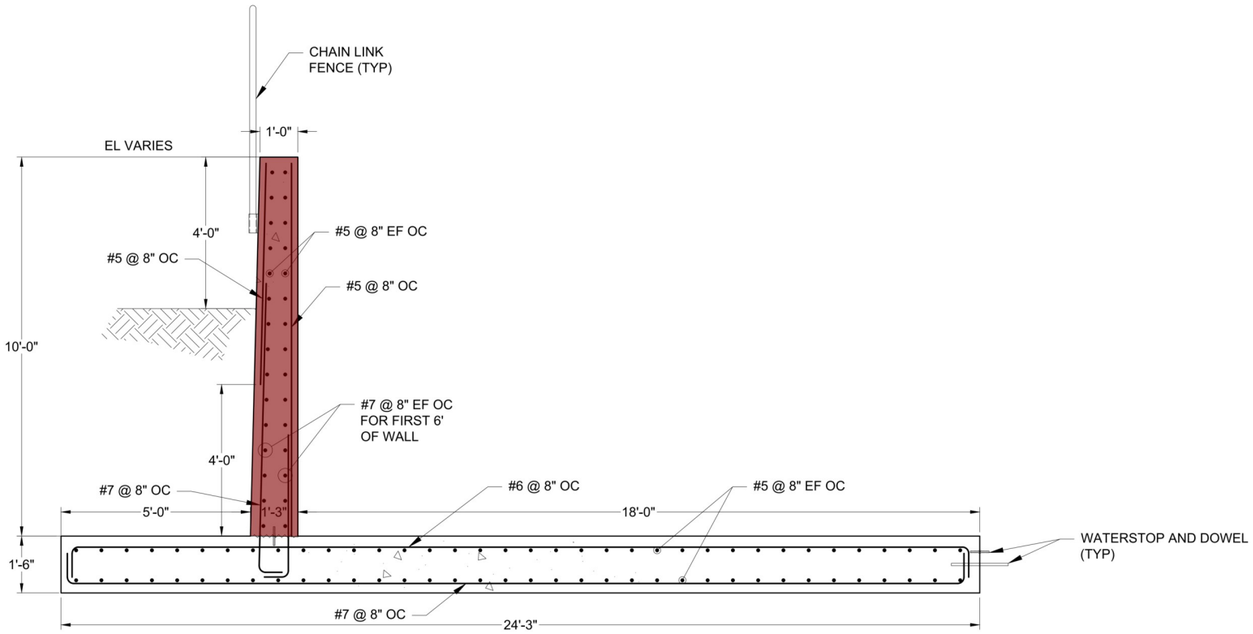

WALL SECTION

SCALE: ½" = 1'-0"

(L4-R4 THROUGH L5-R5 &
L8-R8 THROUGH L20-R20)

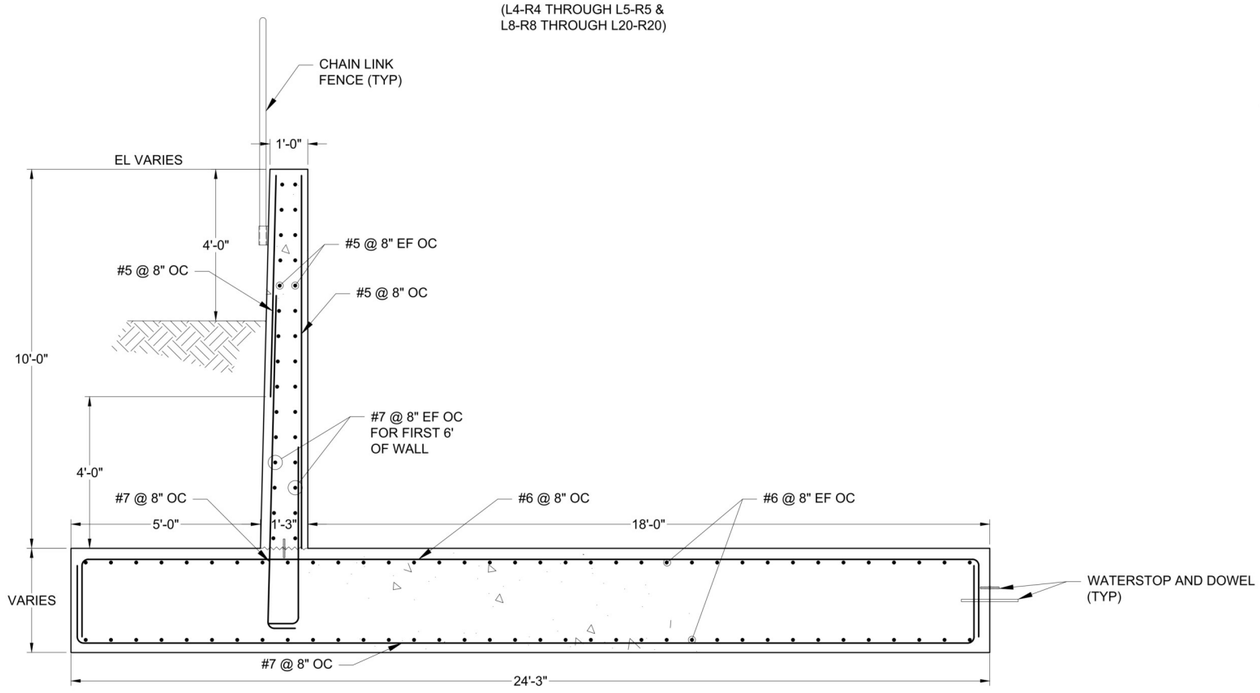

WALL SECTION

SCALE: ½" = 1'-0"

(L6-R6 & L7-R7)

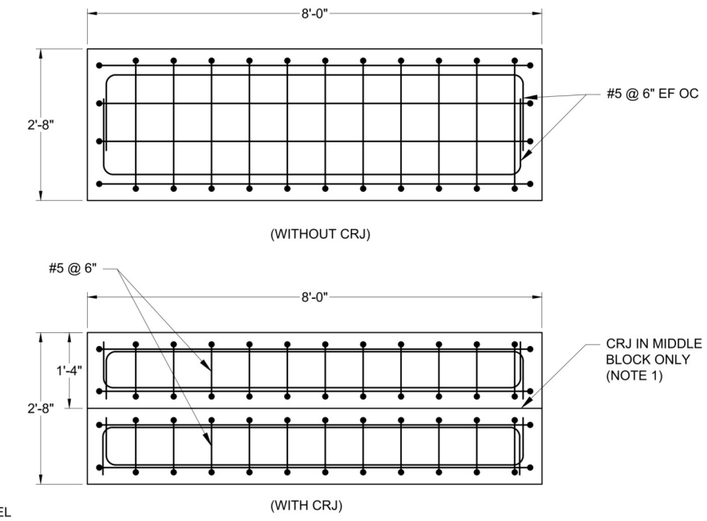

DETAIL

SCALE: 3/4" = 1'-0"

1
S-210

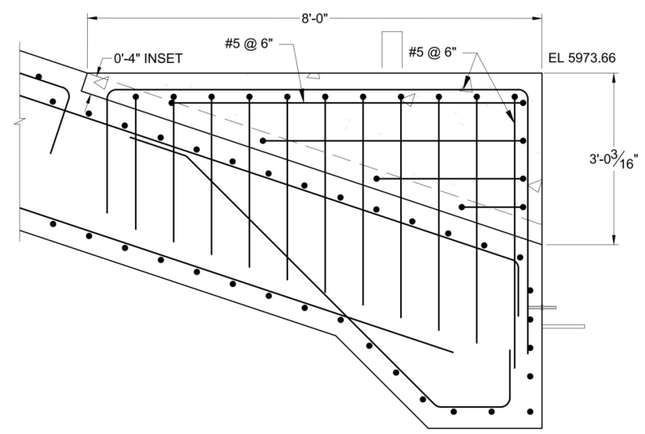

DETAIL

SCALE: 3/4" = 1'-0"

2
S-212

NOTES:

1. CENTER CHUTE BLOCK SHALL HAVE CRJ WITH NO WATER STOP OR DOWEL. PROVIDE BOND BREAKER BETWEEN JOINT.
2. REFER TO DETAIL 212 ON SHEET S-003 FOR VERTICAL CONSTRUCTION JOINT DETAILS.
3. REFER TO DETAILS 204 AND 205 ON SHEET S-003 FOR CONTRACTION JOINT DETAILS. INCLUDE SEALANT JOINTS.
4. REFER TO SHEET C-200 FOR GRADING AROUND STRUCTURES.
5. REFER TO SHEET C-112 FOR CHAIN LINK FENCE DETAILS.

Area 11.3 SQ FT

ISSUED FOR BID
NOT FOR CONSTRUCTION

REV.	DESCRIPTION	DATE

DESIGNED BY: BPT
DRAWN BY: BJL
CHECKED BY: TJF

THOMAS J. FITZGERALD, PE
DATE: 3/19/2024
MT PROFESSIONAL ENGINEER NO. 48689

MONTANA THOMAS JEROME FITZGERALD No. 48689 PE LICENSED PROFESSIONAL ENGINEER

Schnabel ENGINEERING
348 W Parkcenter Blvd, Suite 200 / Boise, Id 83706
Phone: 208-331-9736
schnabel-eng.com

EAST FORK OF ROCK CREEK DAM REHABILITATION
MONTANA DEPARTMENT OF
NATURAL RESOURCES & CONSERVATION
GRANITE COUNTY, MONTANA

L4-R4 THROUGH L20-R20
WALL DETAILS

MONTANA DNRC

PROJECT: 22270012.000
DATE: 4/1/2024
DRAWING NO. S-213
SHEET 78 OF 102

O:\BOISE\2022\22270012.000_EFRC DAM REHAB\03-SE PRODUCTS\08-CAD\STRS-213.DWG
3/18/2024 2:48 PM

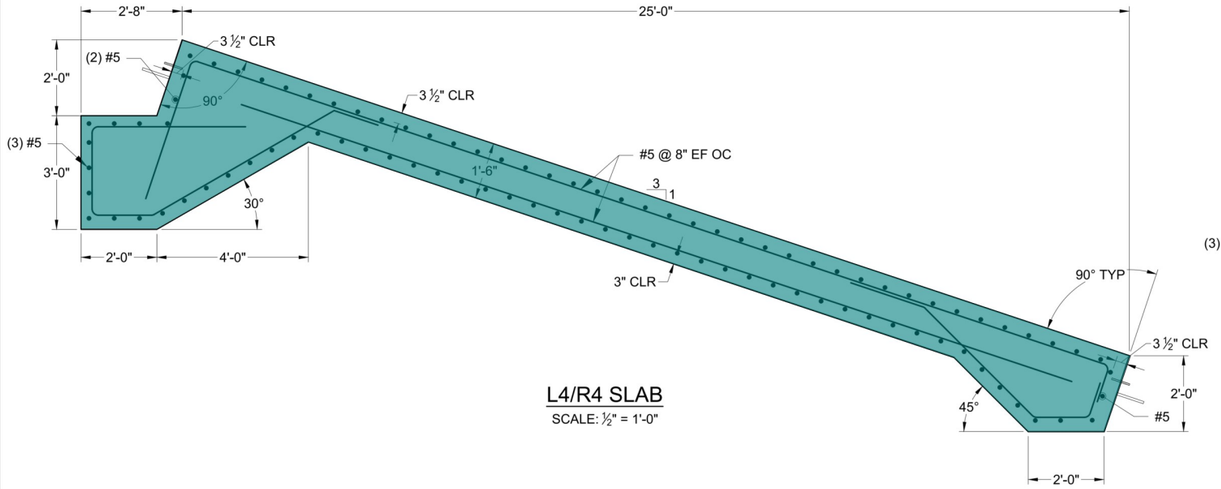

L4/R4 SLAB

SCALE: ½" = 1'-0"

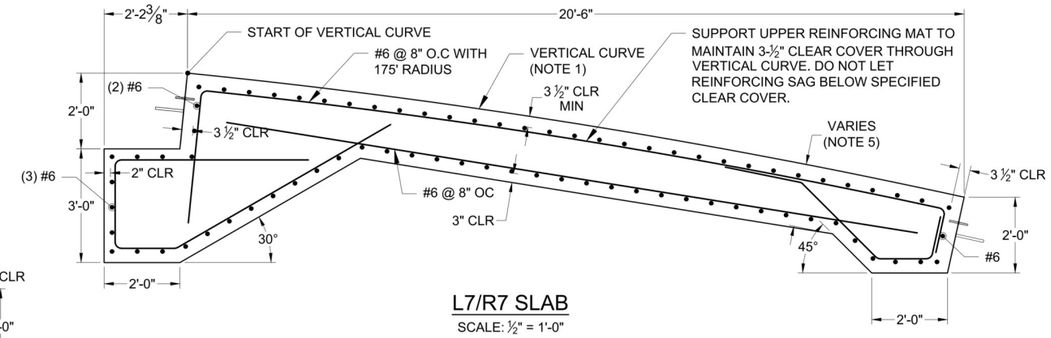

L7/R7 SLAB

SCALE: ½" = 1'-0"

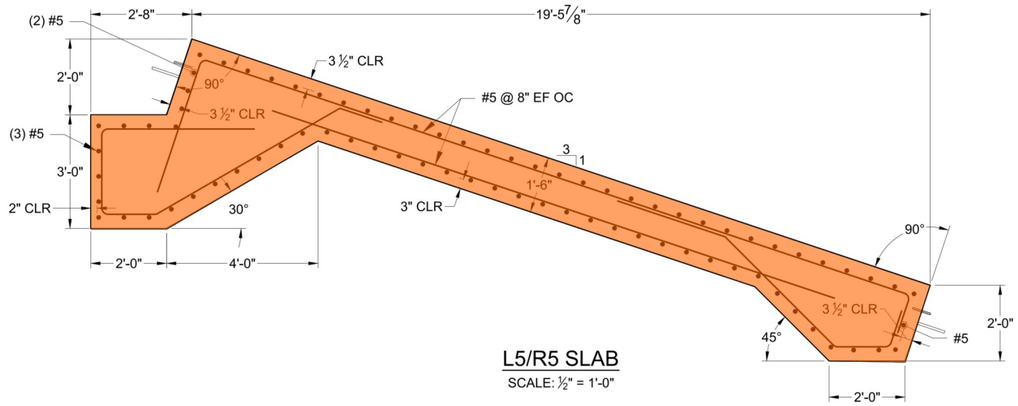

L5/R5 SLAB

SCALE: ½" = 1'-0"

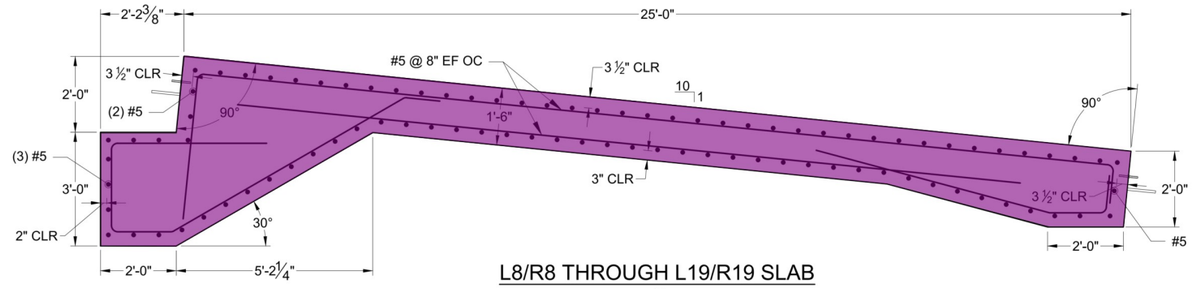

L8/R8 THROUGH L19/R19 SLAB

SCALE: ½" = 1'-0"

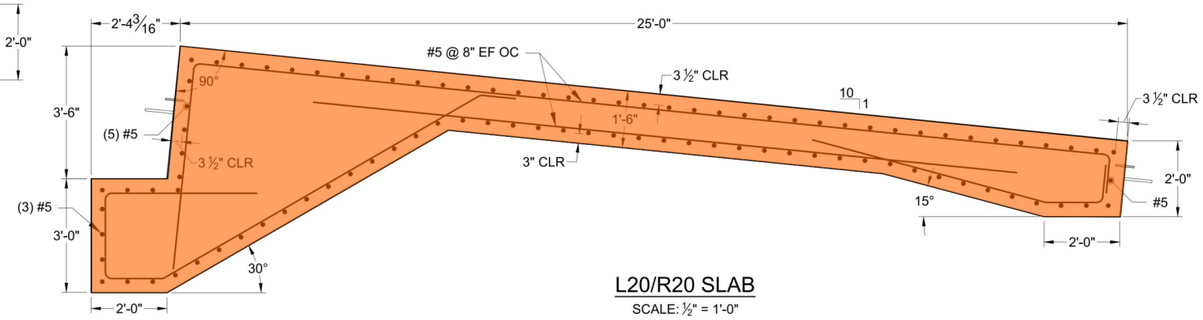

L20/R20 SLAB

SCALE: ½" = 1'-0"

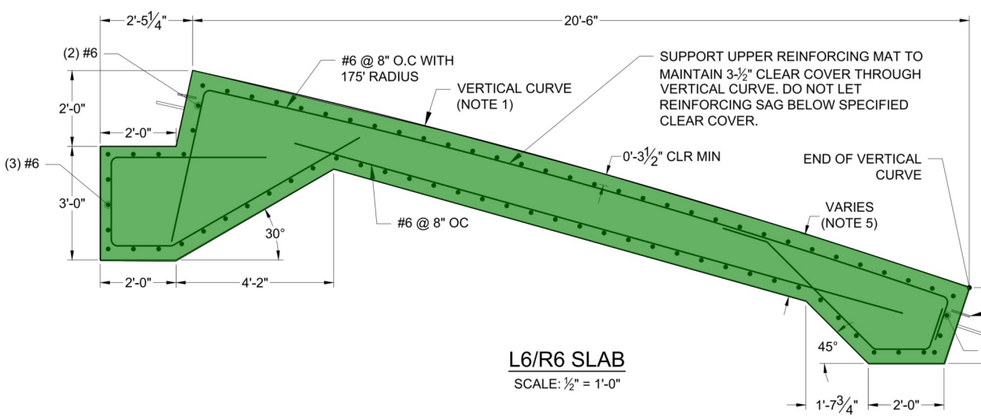

L6/R6 SLAB

SCALE: ½" = 1'-0"

1'-6" Thk X 48'-6" Wide Concrete Slab L-4	56.4 SQ FT
1'-6" Thk X 48'-6" Wide Concrete Slab L-5	47.3 SQ FT
2'-0" Thk X 48'-6" Wide Concrete Slab L-6,7	52.4 SQ FT
1'-6" Thk X 48'-6" Wide Concrete Slab L-8 to 19	55.8 SQ FT
1'-6" Thk X 48'-6" Wide Concrete Slab L-20	65.0 SQ FT

NOTES:

1. REFER TO SHEET C-207 FOR
2. REFER TO WALL SECTIONS FOR MAIN REINFOR
3. REFER TO DETAIL 212 ON SH
CONSTRUCTION JOINT DETAILS
4. REFER TO DETAIL 204 AND 20
CONTRACTION JOINT DETAILS
5. VERTICAL CURVE SLAB THICKNESS SHALL BE
6. REFER TO WALL SECTIONS
REINFORCEMENT.

ISSUED FOR BID
NOT FOR CONSTRUCTION

DATE	DESCRIPTION	REV.

DESIGNED BY: SND
DRAWN BY: ELR
CHECKED BY: TJF

THOMAS J. FITZGERALD, PE
DATE: 3/19/2024
MT PROFESSIONAL ENGINEER NO. 48689

MONTANA PROFESSIONAL LICENSED ENGINEER THOMAS JEROME FITZGERALD No. 48689 PE

Schnabel ENGINEERING
348 W Parkcenter Blvd, Suite 200 / Boise, Id 83706
Phone: 208-331-9736
schnabel-eng.com

EAST FORK OF ROCK CREEK DAM REHABILITATION
MONTANA DEPARTMENT OF NATURAL RESOURCES & CONSERVATION
GRANITE COUNTY, MONTANA

L4-R4 THROUGH L20-20 SLAB DETAILS

MONTANA DNRC

PROJECT: 22270012.000
DATE: 4/1/2024
DRAWING NO. S-214
SHEET 79 OF 102

O:\BOISE\2022\22270012.000_EFRC DAM REHAB\03-SE PRODUCTS\08-CAD\STRS-214.DWG
3/18/2024 2:49 PM

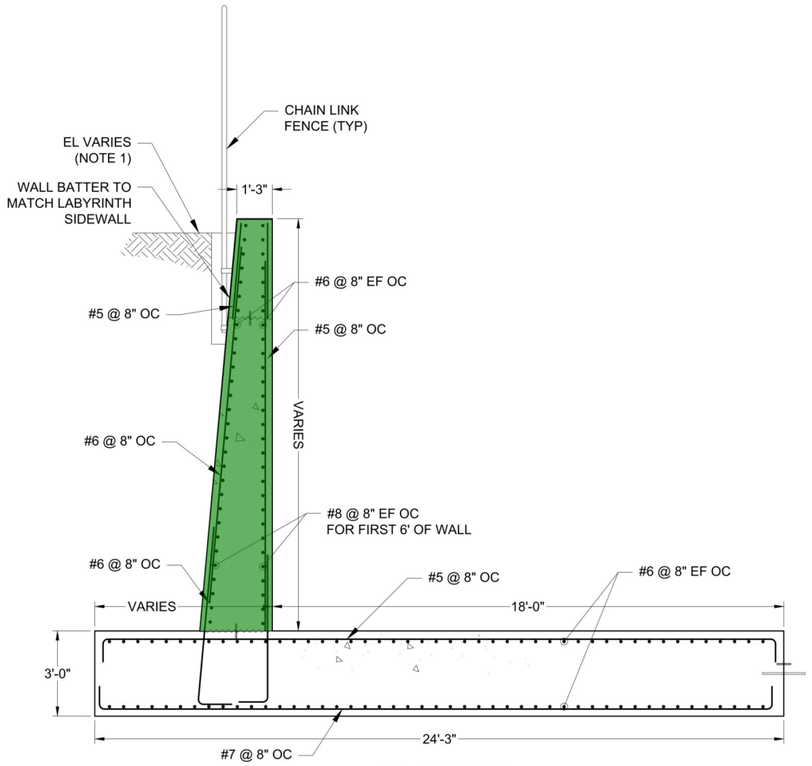

L21/R21 WALL

SCALE: ⅜" = 1'-0"

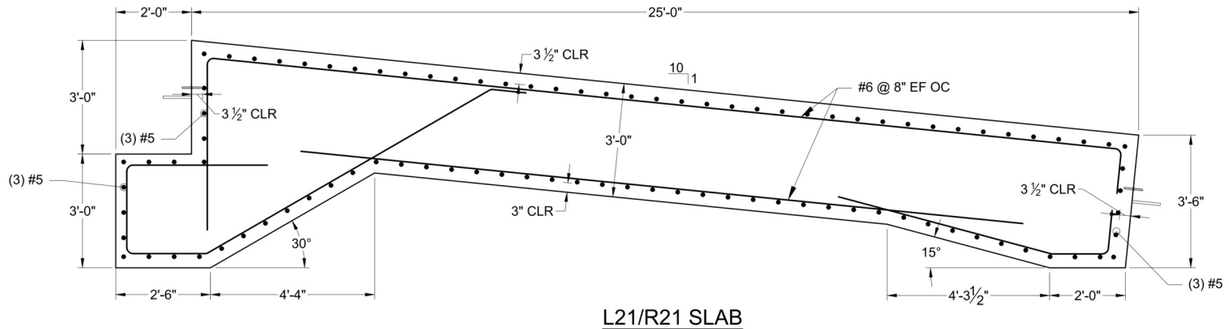

L21/R21 SLAB

SCALE: ½" = 1'-0"

Area 27.4 SQ FT

NOTES:

1. REFER TO C-200 FOR GRADING AROUND STRUCTURES.
2. COORDINATE DRAINAGE AND PIPE PENETRATIONS WITH SHEET C-203 AND C-204.
3. REFER TO C-112 FOR CHAIN LINK FENCE DETAILS.
4. REFER TO DETAIL 212 ON SHEET S-003 FOR VERTICAL CONSTRUCTION JOINT DETAILS.
3. REFER TO DETAIL 204 AND 205 ON SHEET S-003 FOR CONTRACTION JOINT DETAILS. INCLUDE SEALANT JOINT.

ISSUED FOR BID
NOT FOR CONSTRUCTION

REV.	DESCRIPTION	DATE

DESIGNED BY: BPT
DRAWN BY: BJY
CHECKED BY: TJF

THOMAS J. FITZGERALD, PE
DATE: 3/19/2024
MT PROFESSIONAL ENGINEER NO. 48689

MONTANA THOMAS JEROME FITZGERALD No. 48689 PE LICENSED PROFESSIONAL ENGINEER

Schnabel ENGINEERING
348 W Parkcenter Blvd, Suite 200 / Boise, Id 83706
Phone: 208-331-9736
schnabel-eng.com

EAST FORK OF ROCK CREEK DAM REHABILITATION
MONTANA DEPARTMENT OF NATURAL RESOURCES & CONSERVATION
GRANITE COUNTY, MONTANA

L21-R21 WALL & SLAB DETAILS

MONTANA DNRC

PROJECT: 22270012.000
DATE: 4/1/2024
DRAWING NO. S-215
SHEET 80 OF 102

O:\BOISE\2022\22270012.000_EFRC DAM REHAB\03-SE PRODUCTS\08-CAD\STRS-215.DWG
3/18/2024 2:49 PM

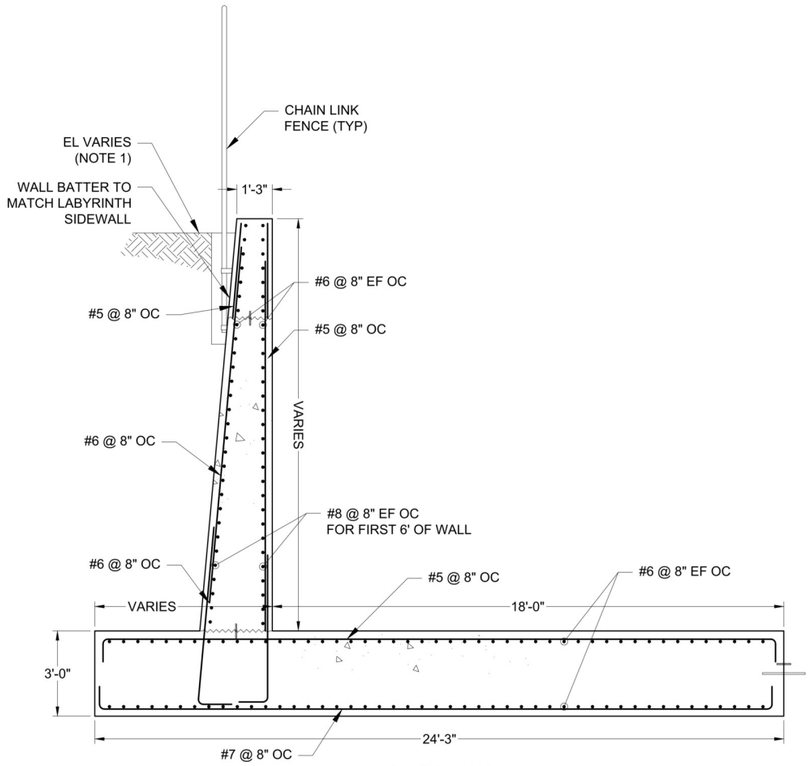

L21/R21 WALL

SCALE: ⅜" = 1'-0"

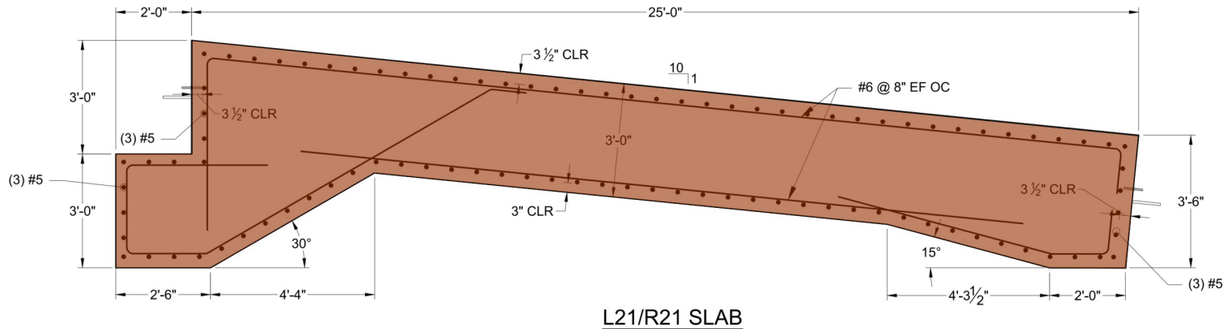

L21/R21 SLAB

SCALE: ½" = 1'-0"

3'-0" Thk X 48'-6" Wide Concrete Slab L-21 **91.3 SQ FT**

NOTES:

1. REFER TO C-200 FOR GRADING AROUND STRUCTURES.
2. COORDINATE DRAINAGE AND PIPE PENETRATIONS WITH SHEET C-203 AND C-204.
3. REFER TO C-112 FOR CHAIN LINK FENCE DETAILS.
4. REFER TO DETAIL 212 ON SHEET S-003 FOR VERTICAL CONSTRUCTION JOINT DETAILS.
3. REFER TO DETAIL 204 AND 205 ON SHEET S-003 FOR CONTRACTION JOINT DETAILS. INCLUDE SEALANT JOINT.

ISSUED FOR BID
NOT FOR CONSTRUCTION

REV.	DESCRIPTION	DATE

DESIGNED BY: BPT
DRAWN BY: BJY
CHECKED BY: TJF

THOMAS J. FITZGERALD, PE
DATE: 3/19/2024
MT PROFESSIONAL ENGINEER NO. 48689

MONTANA PROFESSIONAL ENGINEER LICENSED THOMAS JEROME FITZGERALD No. 48689 PE

Schnabel ENGINEERING
348 W Parkcenter Blvd, Suite 200 / Boise, Id 83706
Phone: 208-331-9736
schnabel-eng.com

EAST FORK OF ROCK CREEK DAM REHABILITATION
MONTANA DEPARTMENT OF NATURAL RESOURCES & CONSERVATION
GRANITE COUNTY, MONTANA

L21-R21 WALL & SLAB DETAILS

MONTANA DNRC

PROJECT: 22270012.000
DATE: 4/1/2024
DRAWING NO. S-215
SHEET 80 OF 102

O:\BOISE\2022\22270012.000_EFRC DAM REHAB\03-SE PRODUCTS\08-CAD\STRS-215.DWG
3/18/2024 2:49 PM

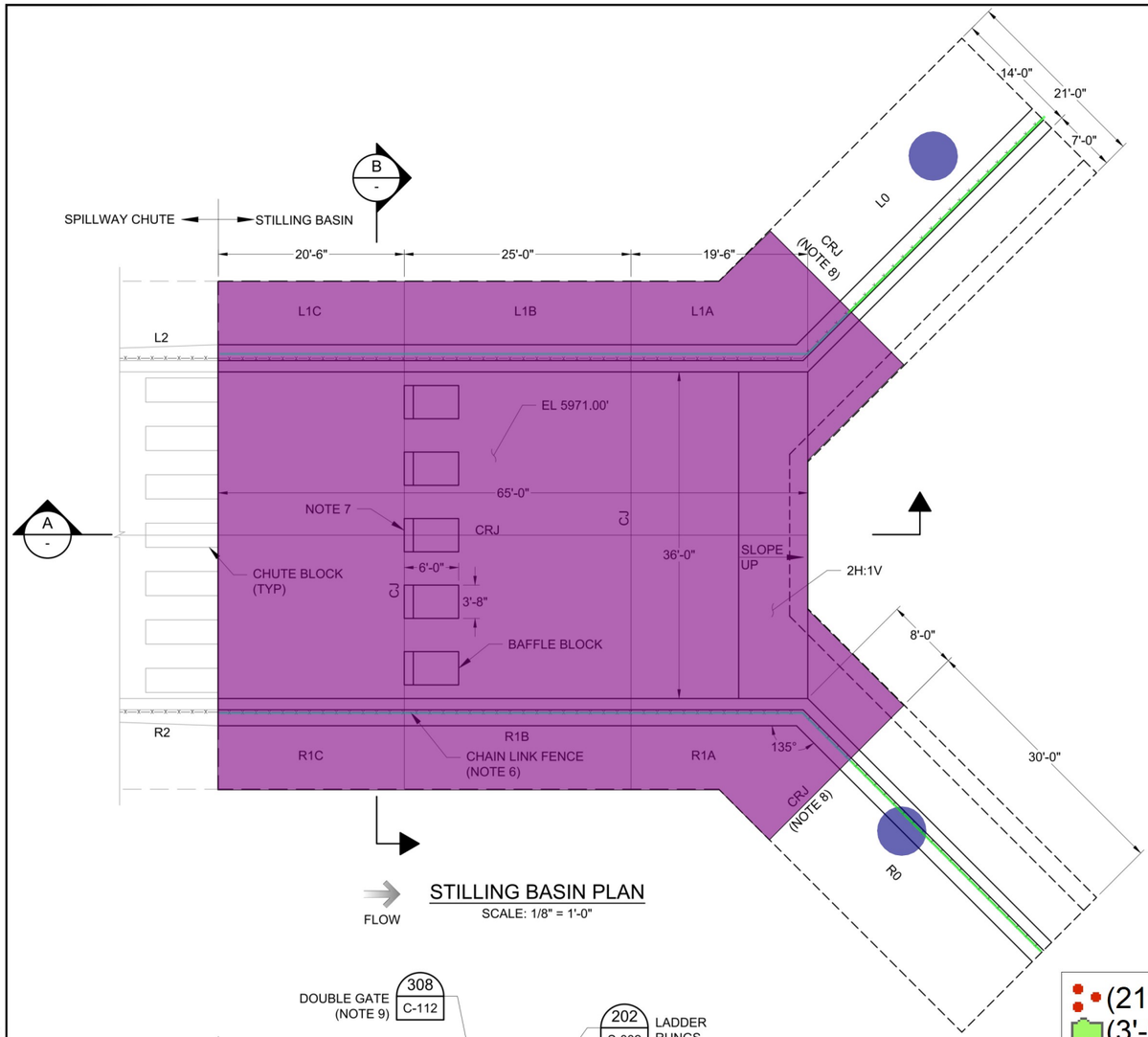

STILLING BASIN PLAN
SCALE: 1/8" = 1'-0"

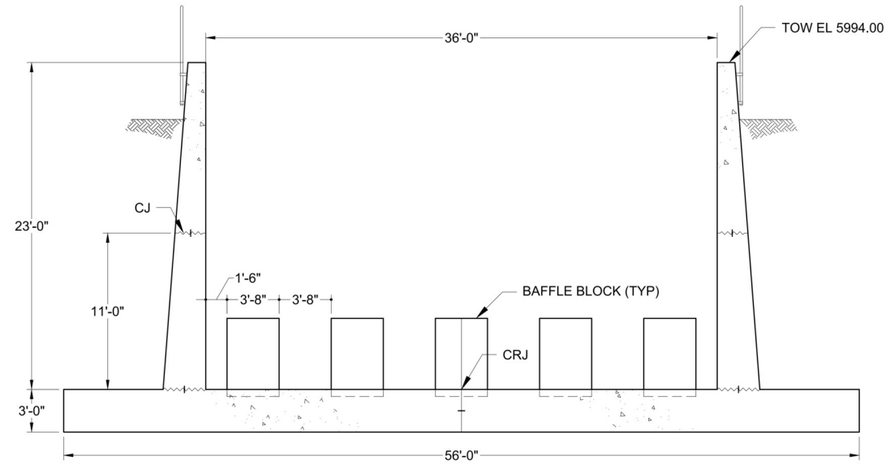

SECTION B -
SCALE: 1/8" = 1'-0"

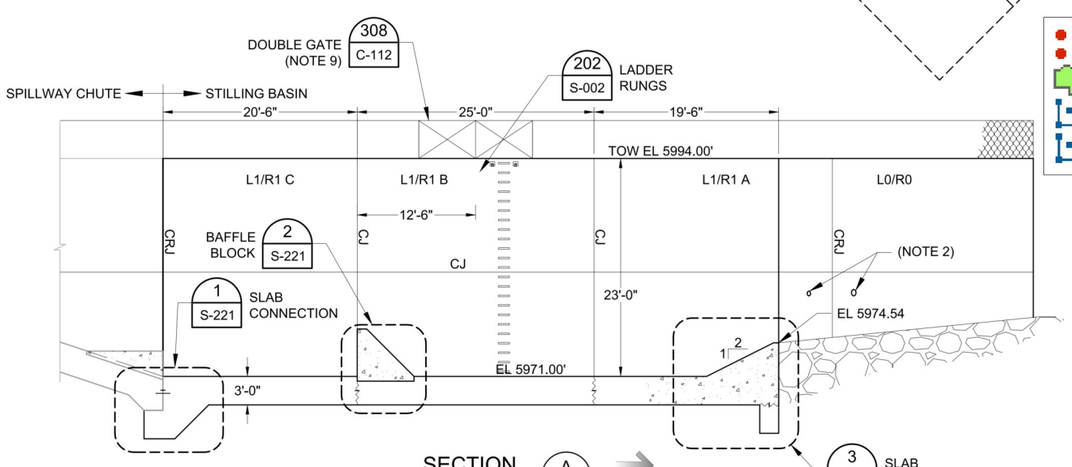

SECTION A -
SCALE: 1/8" = 1'-0"

(21' X 30' X 3') Concrete Slab-L0	2.0 EA
(3'-0" Deep) Slab-L1	3928.7 SQ FT
3'-0" Thk. Retaining Wall (23'-0" H) (49 SF)-L0	60.3 FT
3'-0" Thk. Retaining Wall (23'-0" H) (49 SF)-L1	143.0 FT

1. REFER TO C-200 FOR GRADING AROUND STRUCTURES.
2. COORDINATE DRAINAGE AND PIPE PENETRATIONS WITH SHEET C-203.
3. REFER TO DETAIL 212 ON SHEET S-002 FOR VERTICAL CONSTRUCTION JOINT DETAILS.
4. REFER TO DETAIL 204 AND 205 ON SHEET S-002 FOR CONTRACTION JOINT DETAILS. INCLUDE SEALANT JOINT.
5. REFER TO CIVIL SHEETS C-100 FOR SPILLWAY COORDINATES.
6. REFER TO C-112 FOR CHAIN LINK FENCE DETAILS.
7. CENTER BAFFLE BLOCK SHALL HAVE A CRJ THROUGH THE CENTER. NO WATERSTOP OR DOWELS ARE REQUIRED. REINFORCEMENT SHALL NOT BE CONTINUOUS THROUGH THE JOINT.
8. SEALANT JOINT NOT REQUIRED FOR CRJ AT THIS LOCATION.
9. DOUBLE GATE SHALL BE CENTERED OVER LADDER RUNGS.

ISSUED FOR BID
NOT FOR CONSTRUCTION

REV.	DESCRIPTION	DATE

DESIGNED BY: BPT
DRAWN BY: BJY
CHECKED BY: TJF

THOMAS J. FITZGERALD, PE
DATE: 3/19/2024
MT PROFESSIONAL ENGINEER NO. 48689

MONTANA THOMAS JEROME FITZGERALD No. 48689 PE LICENSED PROFESSIONAL ENGINEER

Schnabel ENGINEERING
348 W Parkcenter Blvd, Suite 200 / Boise, Id 83706
Phone: 208-331-9736
schnabel-eng.com

EAST FORK OF ROCK CREEK DAM REHABILITATION
MONTANA DEPARTMENT OF
NATURAL RESOURCES & CONSERVATION
GRANITE COUNTY, MONTANA

SPILLWAY STILLING BASIN
PLAN & SECTIONS

MONTANA DNRC

PROJECT: 22270012.000
DATE: 4/1/2024
DRAWING NO. S-220
SHEET 81 OF 102

O:\BOISE\2022\22270012.000_EFRC DAM REHAB\03-SE PRODUCTS\08-CAD\STRS-220.DWG
3/18/2024 2:49 PM

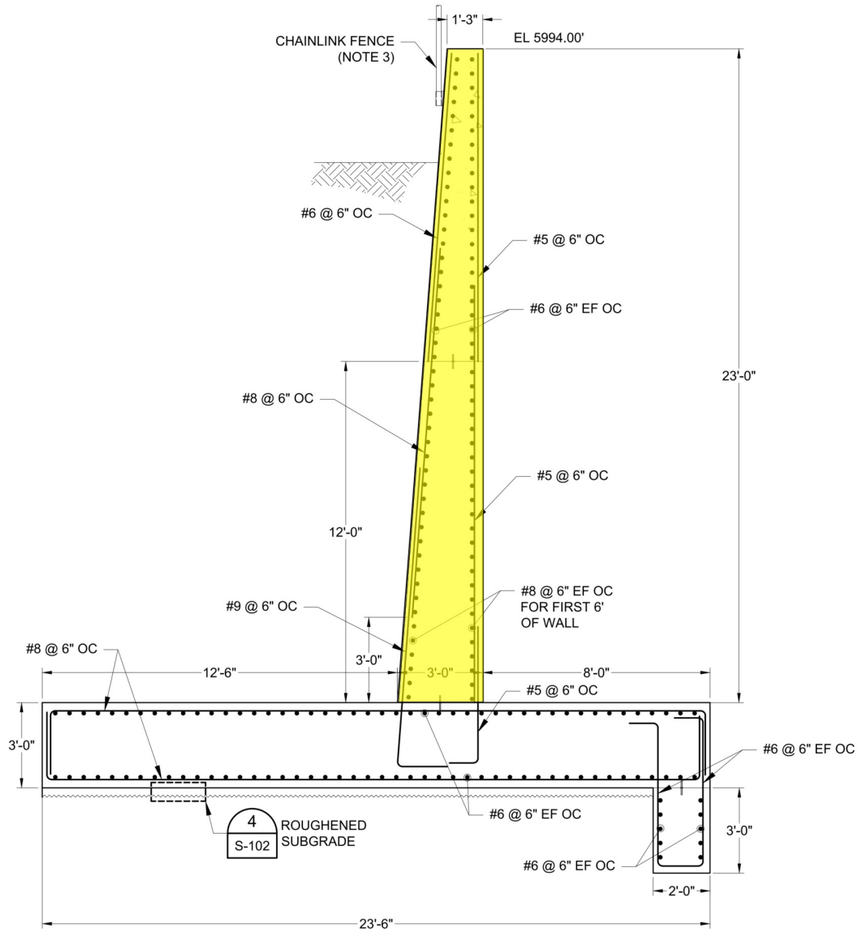

L0/R0 WALL SECTION

SCALE: ⅜" = 1'-0"

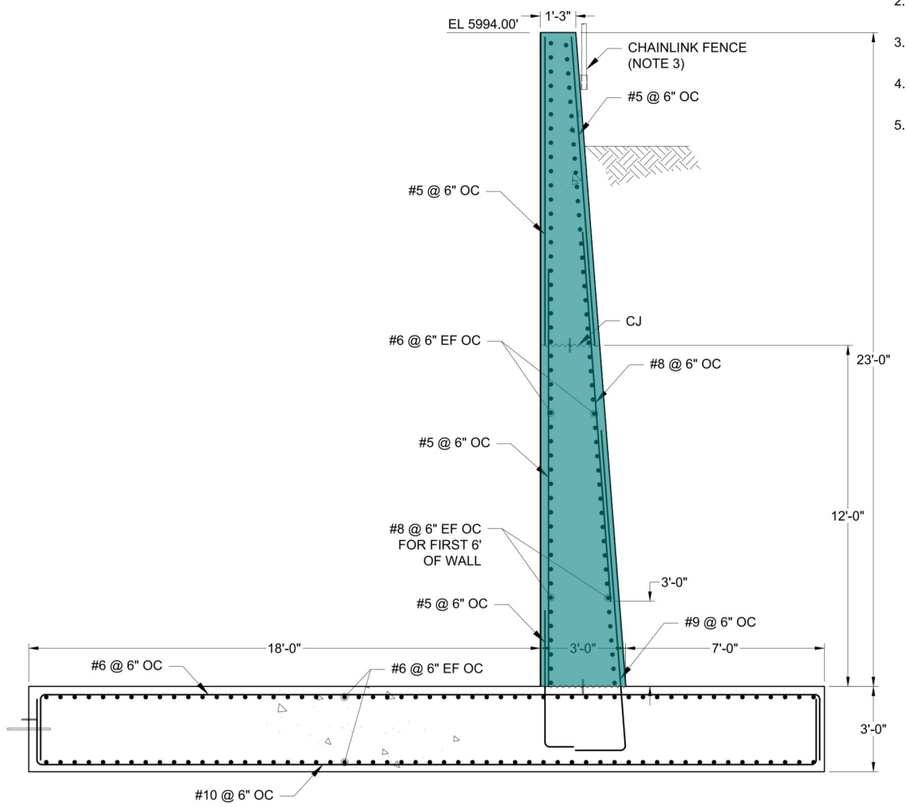

L1/R1 WALL SECTION

SCALE: ⅜" = 1'-0"

REFER TO L1/R1 WALL SECTION FOR REINFORCING

Area 48.5 SQ FT

Area 48.7 SQ FT

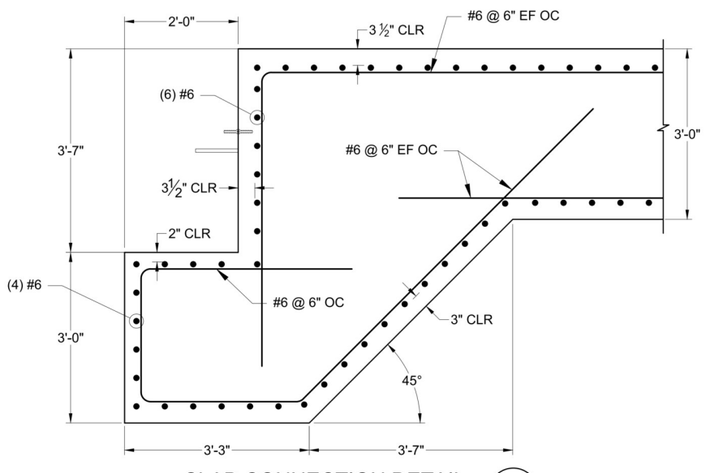

SLAB CONNECTION DETAIL

1 / S-220

SCALE: 3/4" = 1'-0"

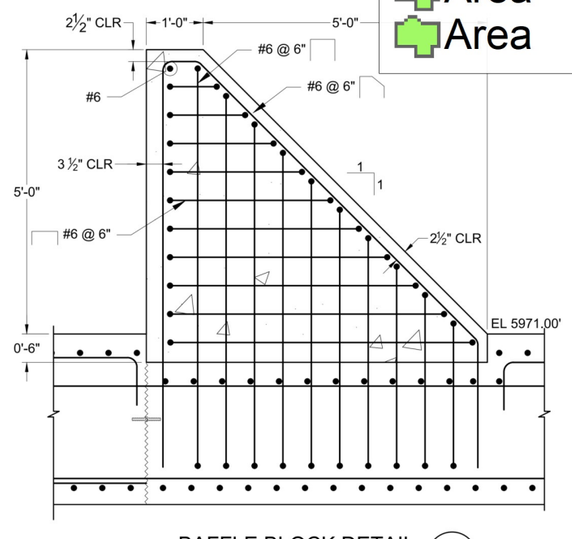

BAFFLE BLOCK DETAIL

2 / S-220

SCALE: 3/4" = 1'-0"

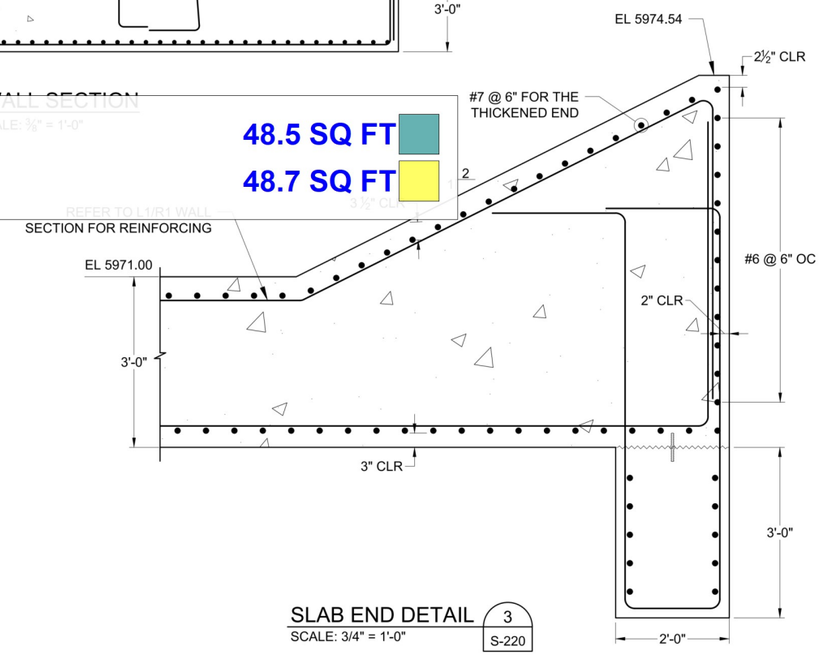

SLAB END DETAIL

3 / S-220

SCALE: 3/4" = 1'-0"

NOTES:

1. REFER TO C-200 FOR GRADING AROUND STRUCTURES.
2. COORDINATE DRAINAGE AND PIPE PENETRATIONS WITH SHEET C-203.
3. REFER TO C-112 FOR CHAIN LINK FENCE DETAILS.
4. REFER TO DETAIL 212 ON SHEET S-003 FOR VERTICAL CONSTRUCTION JOINT DETAILS.
5. REFER TO DETAIL 204 AND 205 ON SHEET S-003 FOR CONTRACTION JOINT DETAILS. INCLUDE SEALANT JOINT.

ISSUED FOR BID
NOT FOR CONSTRUCTION

REV.	DESCRIPTION	DATE

DESIGNED BY: BPT
DRAWN BY: BJY
CHECKED BY: TJF

THOMAS J. FITZGERALD, PE
DATE: 3/19/2024
MT PROFESSIONAL ENGINEER NO. 48689

MONTANA THOMAS JEROME FITZGERALD No. 48689 PE LICENSED PROFESSIONAL ENGINEER

Schnabel ENGINEERING
348 W Parkcenter Blvd, Suite 200 / Boise, Id 83706
Phone: 208-331-9736
schnabel-eng.com

EAST FORK OF ROCK CREEK DAM REHABILITATION
MONTANA DEPARTMENT OF
NATURAL RESOURCES & CONSERVATION
GRANITE COUNTY, MONTANA

STILLING BASIN
SECTION & DETAILS

MONTANA DNRC

PROJECT: 22270012.000
DATE: 4/1/2024
DRAWING NO. S-221
SHEET 82 OF 102

O:\BOISE\2022\22270012.000_EFRC DAM REHAB\03-SE PRODUCTS\08-CAD\STRS-221.DWG
3/18/2024 2:50 PM

NOTES:

1. REFER TO C-200 FOR GRADING AROUND STRUCTURES.
2. COORDINATE DRAINAGE AND PIPE PENETRATIONS WITH SHEET C-203.
3. REFER TO C-112 FOR CHAIN LINK FENCE DETAILS.
4. REFER TO DETAIL 212 ON SHEET S-003 FOR VERTICAL CONSTRUCTION JOINT DETAILS.
5. REFER TO DETAIL 204 AND 205 ON SHEET S-003 FOR CONTRACTION JOINT DETAILS. INCLUDE SEALANT JOINT.

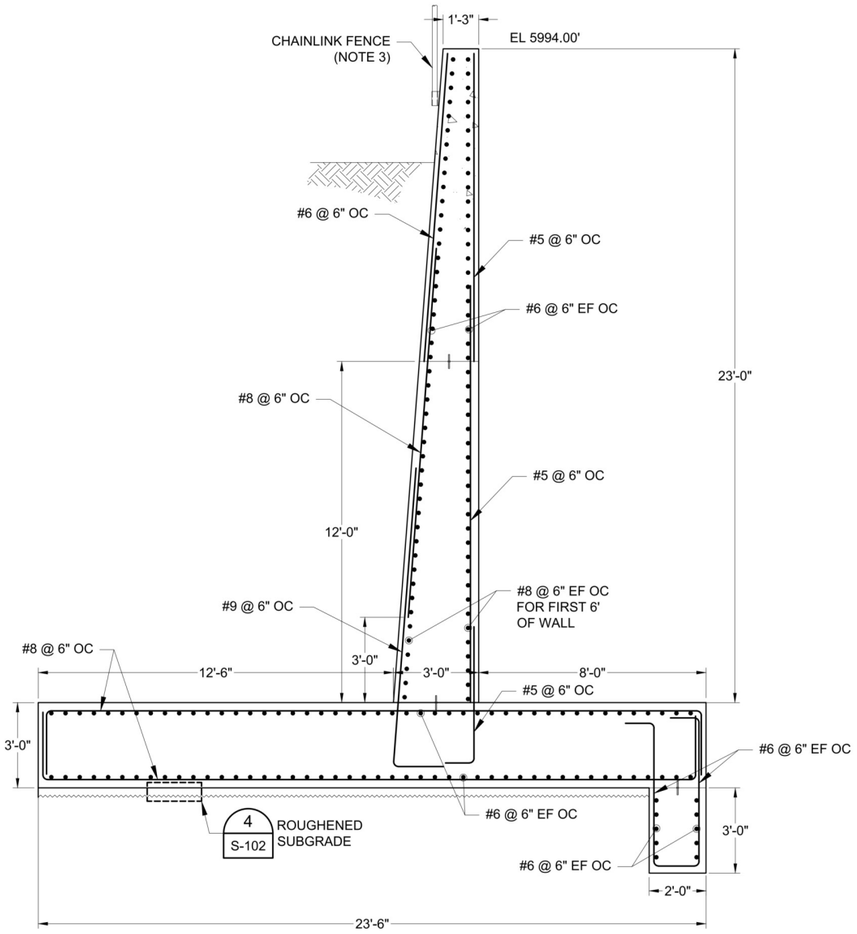

L0/R0 WALL SECTION

SCALE: ⅜" = 1'-0"

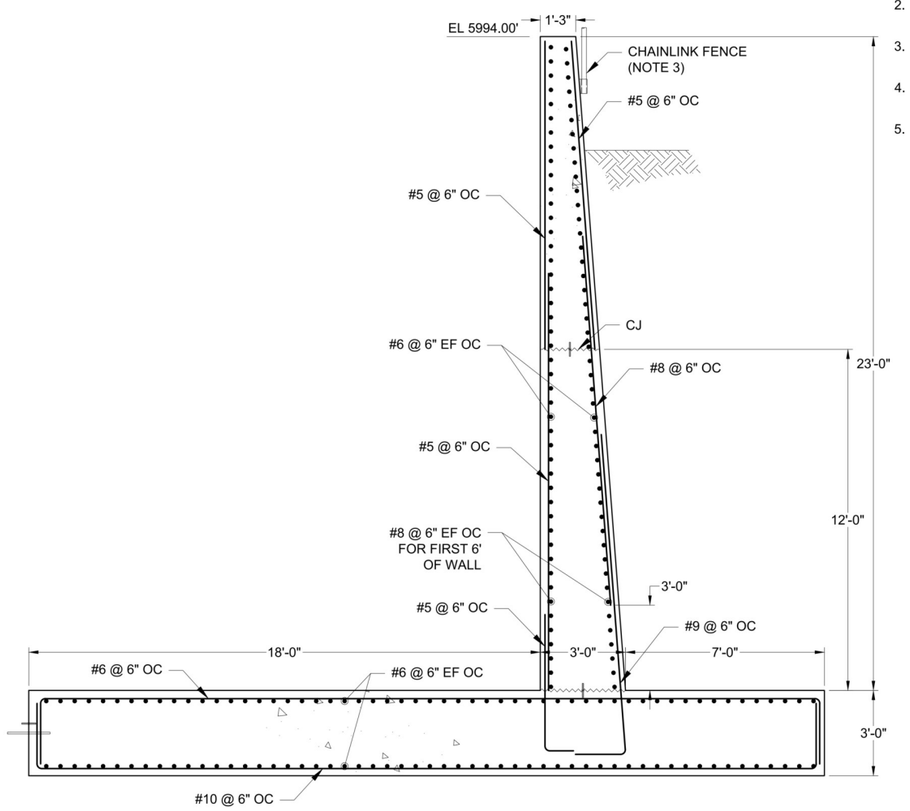

L1/R1 WALL SECTION

SCALE: ⅜" = 1'-0"

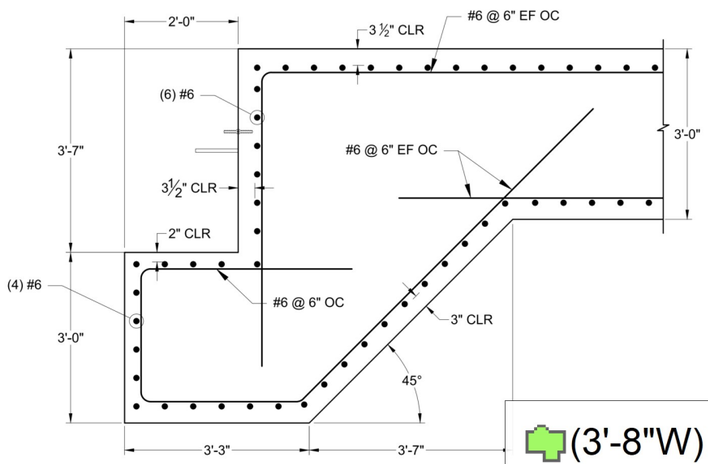

SLAB CONNECTION DETAIL

SCALE: 3/4" = 1'-0"

S-220

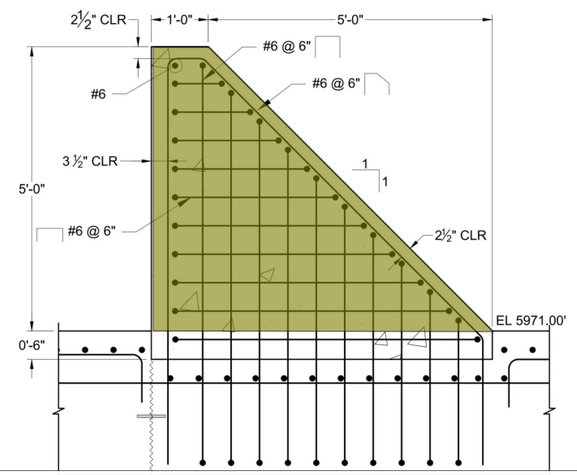

(3'-8"W) Baffle Block (5 EA)

17.4 SQ FT

BAFFLE BLOCK DETAIL

SCALE: 3/4" = 1'-0"

S-220

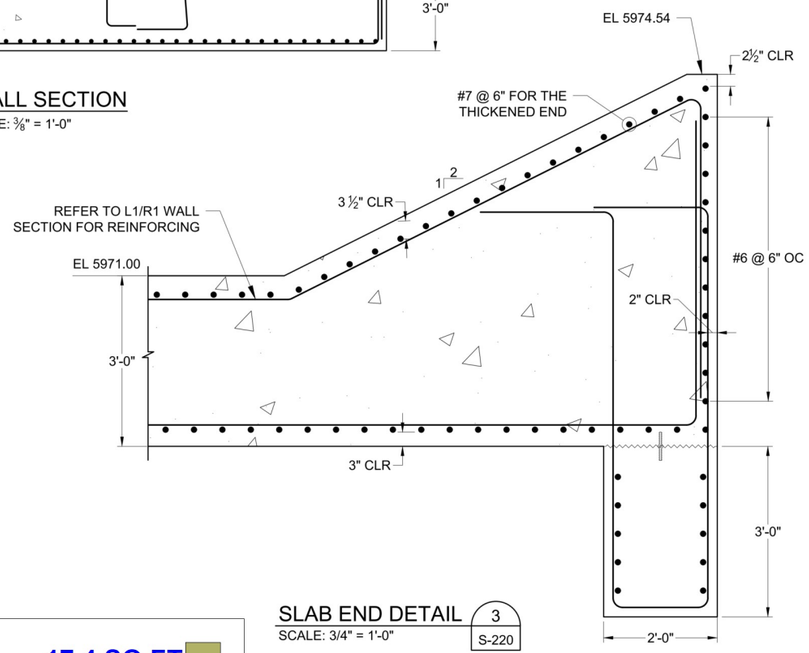

SLAB END DETAIL

SCALE: 3/4" = 1'-0"

3 S-220

ISSUED FOR BID
NOT FOR CONSTRUCTION

REV.	DESCRIPTION	DATE

DESIGNED BY: BPT
DRAWN BY: BJY
CHECKED BY: TJF

THOMAS J. FITZGERALD, PE
DATE: 3/19/2024
MT PROFESSIONAL ENGINEER NO. 48689

MONTANA THOMAS JEROME FITZGERALD No. 48689 PE LICENSED PROFESSIONAL ENGINEER

Schnabel ENGINEERING
348 W Parkcenter Blvd, Suite 200 / Boise, Id 83706
Phone: 208-331-9736
schnabel-eng.com

EAST FORK OF ROCK CREEK DAM REHABILITATION
MONTANA DEPARTMENT OF NATURAL RESOURCES & CONSERVATION
GRANITE COUNTY, MONTANA

STILLING BASIN
SECTION & DETAILS

MONTANA DNRC

PROJECT: 22270012.000
DATE: 4/1/2024
DRAWING NO. S-221
SHEET 82 OF 102

O:\BOISE\2022\22270012.000_EFRC DAM REHAB\03-SE PRODUCTS\08-CAD\STRS-221.DWG

3/18/2024 2:50 PM

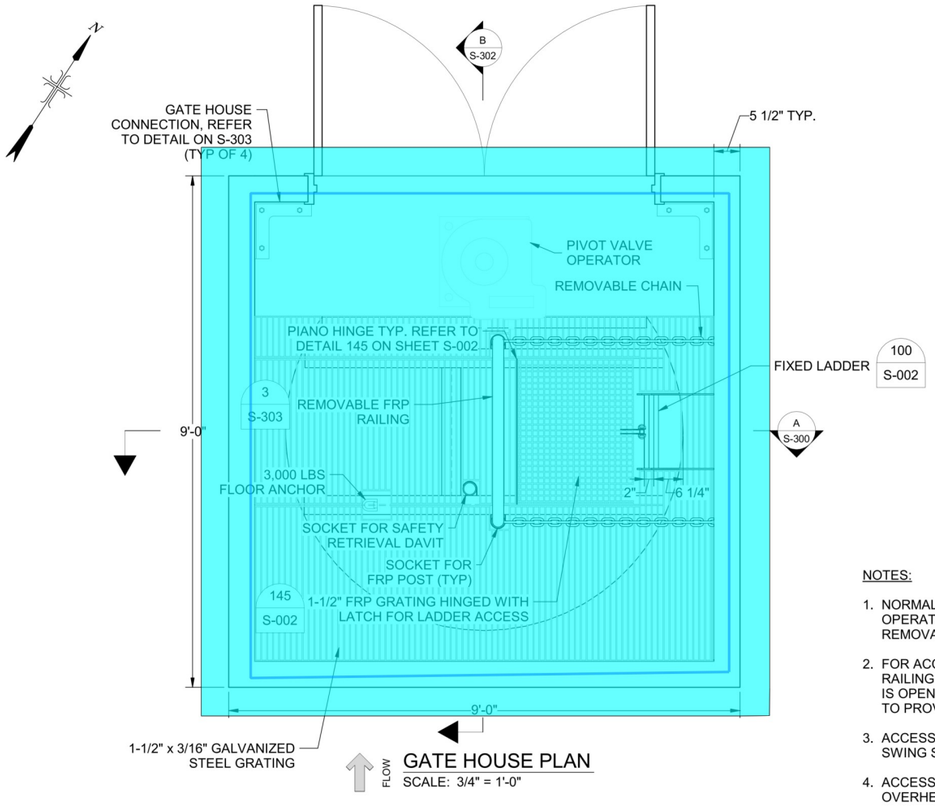

GATE HOUSE PLAN

SCALE: 3/4" = 1'-0"

NOTES:

1. NORMAL GATE HOUSE CONFIGURATION FOR PIVOT VALVE OPERATION IS WITH HINGED GRATING CLOSED AND REMOVABLE RAILING STORED AGAINST WALL.
2. FOR ACCESS TO TOWER CONTROL CHAMBER, REMOVABLE RAILING IS POSITIONED IN SOCKETS AND HINGED GRATING IS OPENED AND LATCHED. SAFETY CHAINS ARE ATTACHED TO PROVIDE SAFETY ON OTHER TWO SIDES.
3. ACCESS DOORS SHALL BE PROVIDED WITH EXTERNAL OUT SWING SECURITY HINGES.
4. ACCESS DOORS SHALL BE PROVIDED WITH A PIN-LOCKABLE OVERHEAD DOOR HOLDER TO PREVENT OVERTRAVEL AND UNINTENDED CLOSURE.
5. FIXED LADDER FALL PROTECTION SYSTEM SHALL BE 3M DBI-SALA 6116636 AND SHALL BE INSTALLED PER MANUFACTURER'S INSTRUCTIONS. CONTRACTOR SHALL ALSO FURNISH AND INSTALL 3 EACH X3 FLEXIBLE SLEEVES (6160054), 2 EACH CABLE GUIDES (6100400) TO MAINTAIN MAXIMUM RECOMMENDED SPACING OF 25', 75' OF WIRE ROPE (6104075), AND ANY OTHER PARTS REQUIRED FOR A COMPLETE FALL PROTECTION SYSTEM PER THE MANUFACTURER'S INSTRUCTIONS.

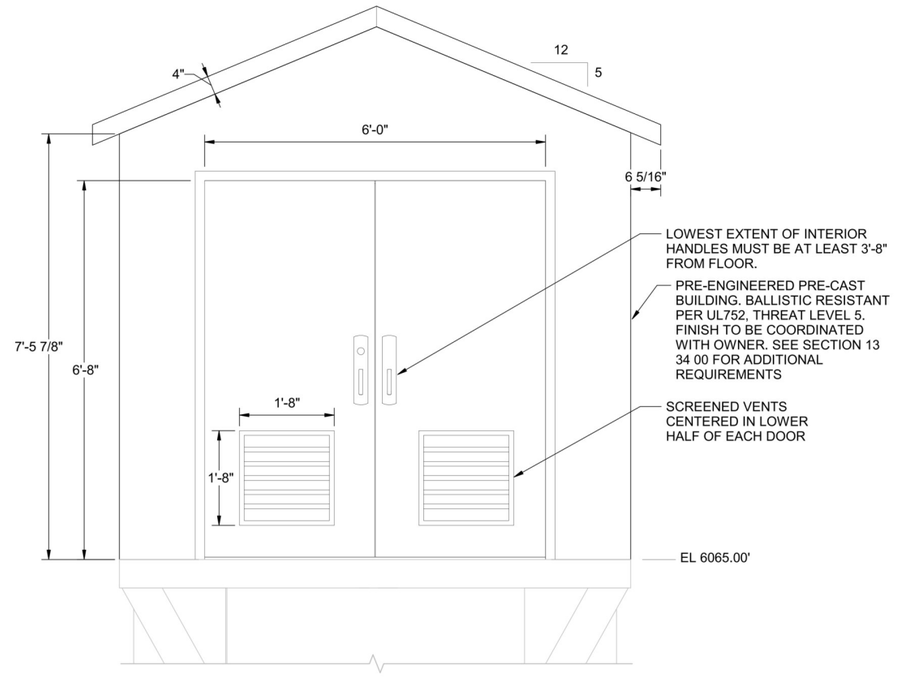

DOWNSTREAM ELEVATION

SCALE: 3/4" = 1'-0"

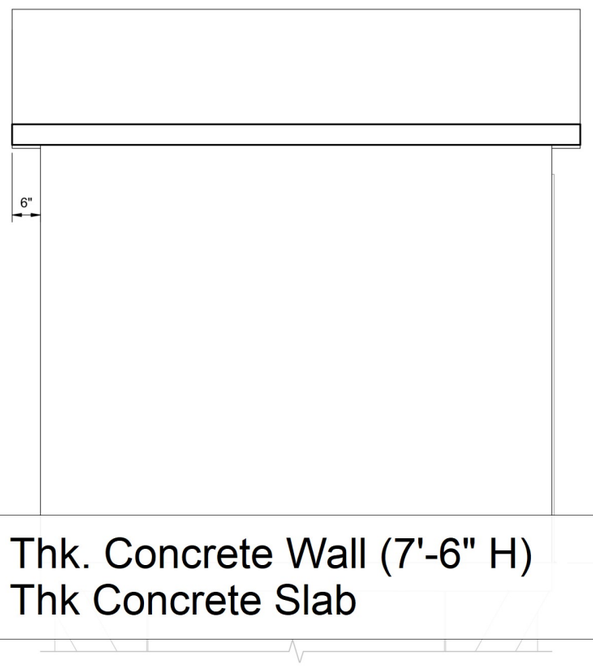

6" Thk. Concrete Wall (7'-6" H) 33.8 FT

4" Thk Concrete Slab 100.4 SQ FT

LEFT ELEVATION

SCALE: 3/4" = 1'-0"

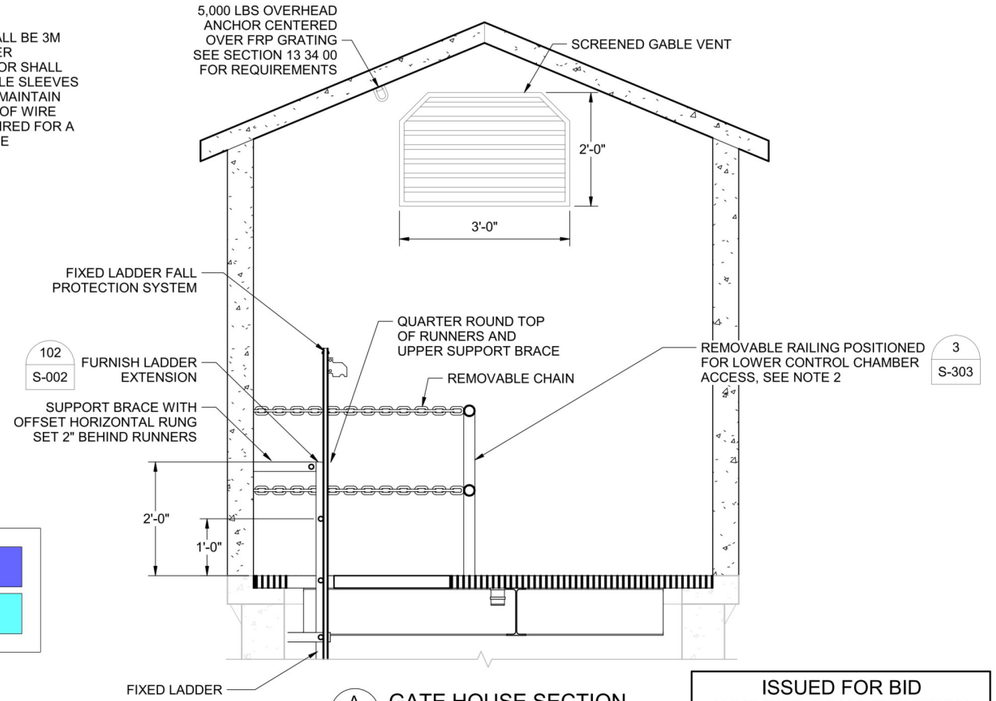

A
-
GATE HOUSE SECTION

SCALE: 3/4" = 1'-0"

ISSUED FOR BID
NOT FOR CONSTRUCTION

REV.	DESCRIPTION	DATE

DESIGNED BY: DEC
DRAWN BY: BJY
CHECKED BY: TJF

THOMAS J. FITZGERALD, PE
MT PROFESSIONAL ENGINEER NO. 48689
DATE: 3/19/2024

MONTANA PROFESSIONAL ENGINEER
THOMAS JEROME FITZGERALD
No. 48689 PE

Schnabel ENGINEERING
250 S. 5th Street, Suite 510 / Boise, ID 83702
Phone: 208-331-9736
schnabel-eng.com

EAST FORK OF ROCK CREEK DAM REHABILITATION
MONTANA DEPARTMENT OF NATURAL RESOURCES & CONSERVATION
GRANITE COUNTY, MONTANA

GATE HOUSE PLAN & SECTIONS

MONTANA DNRC

PROJECT: 22270012.000
DATE: 4/1/2024
DRAWING NO. S-300
SHEET 84 OF 102

O:\Boise\2022\22270012.000_EFRC Dam Rehab\03-SE Products\08-CAD\REVIT\RVT\Outlet Works.rvt
3/12/2024 11:00:03 AM

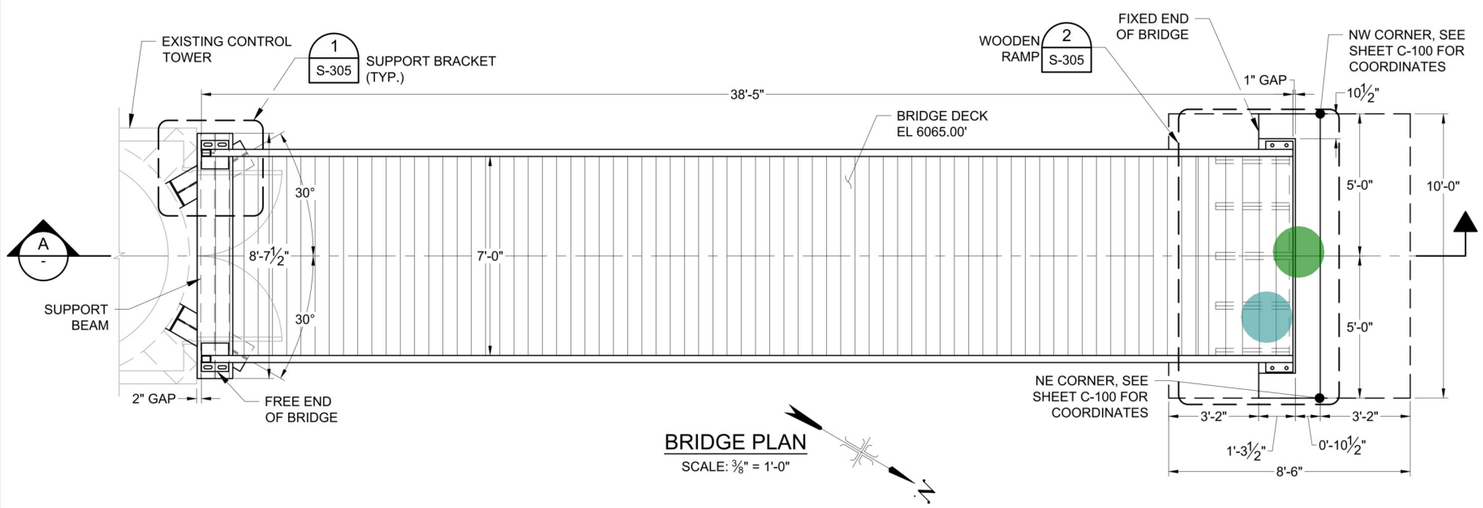

BRIDGE PLAN
SCALE: ⅜" = 1'-0"

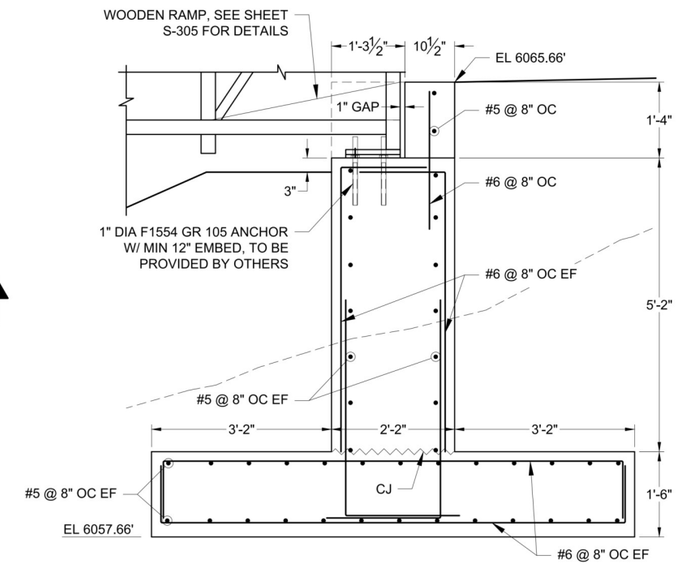

DETAIL 1 -
SCALE: 3/4" = 1'-0"

(10'-0"x8'-6"x1'-6") Pad Footing — 1.0 EA
(2'-2"x10'-0"x5'-2") Concrete Stem Wall — 1.0 EA

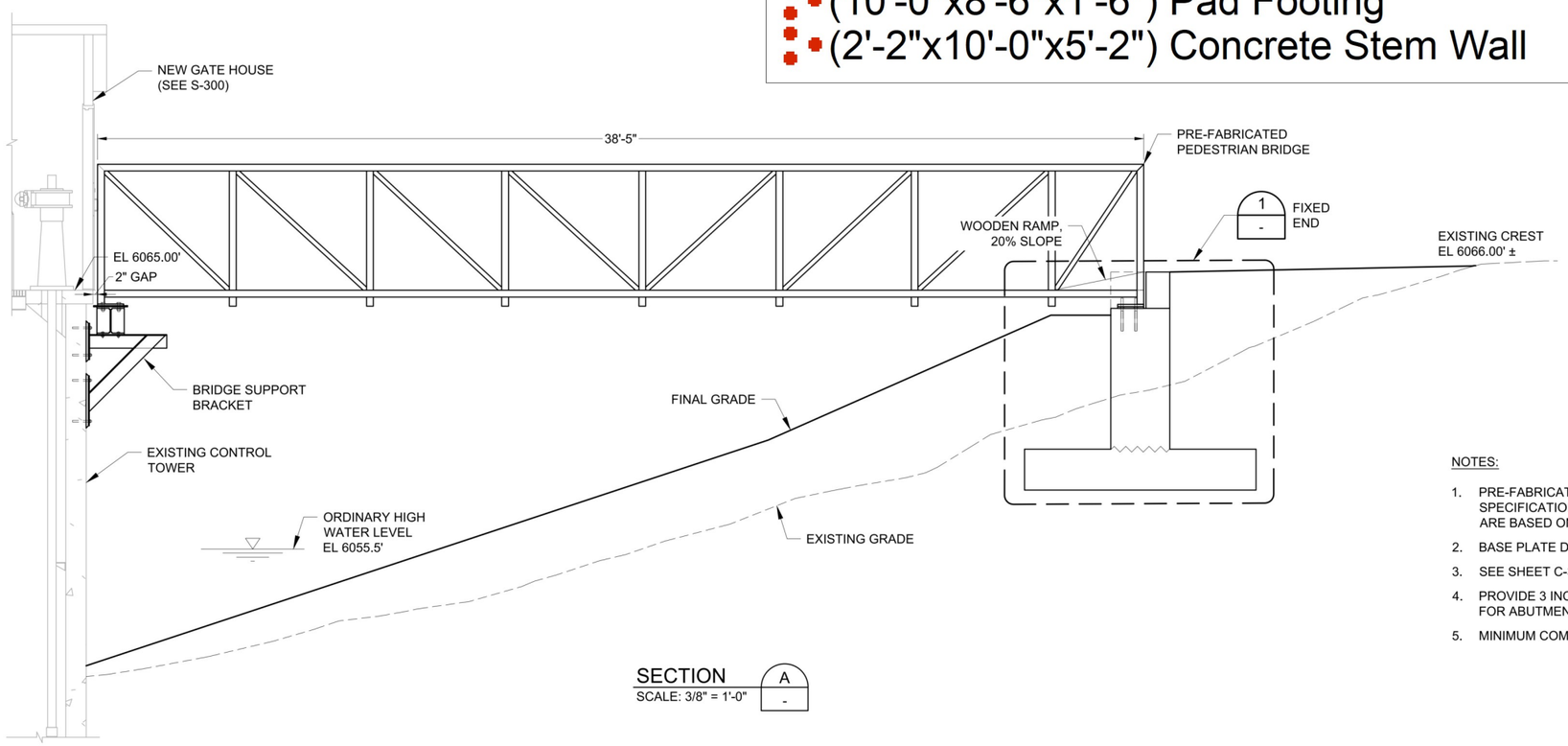

SECTION A -
SCALE: 3/8" = 1'-0"

NOTES:

1. PRE-FABRICATED PEDESTRIAN BRIDGE SHALL BE DESIGNED & FABRICATED BY OTHERS. SEE SPECIFICATION 32 34 13, BRIDGE DETAILS SHOWN ON THIS DRAWING ARE CONCEPTUAL AND ARE BASED ON PRELIMINARY DESIGN BY CONTECH.
2. BASE PLATE DIMENSION SHALL BE PER BRIDGE MANUFACTURER.
3. SEE SHEET C-301 FOR GRADING AROUND BRIDGE PIER.
4. PROVIDE 3 INCHES MIN CONCRETE COVER FOR FOOTING AND 2 INCHES MIN CONCRETE COVER FOR ABUTMENT WALL.
5. MINIMUM COMPRESSIVE STRENGTH OF THE CONCRETE AT 28 DAYS SHALL BE 4,500 PSI.

ISSUED FOR BID
NOT FOR CONSTRUCTION

REV.	DESCRIPTION	DATE

DESIGNED BY: BPT
DRAWN BY: BJL
CHECKED BY: TJF

THOMAS J. FITZGERALD, PE
DATE: 2/19/2024
MT PROFESSIONAL ENGINEER NO. 48689

MONTANA THOMAS JEROME FITZGERALD No. 48689 PE LICENSED PROFESSIONAL ENGINEER

Schnabel ENGINEERING
348 W Parkcenter Blvd, Suite 200 | Boise, Id 83706
Phone: 208-331-9736
schnabel-eng.com

EAST FORK OF ROCK CREEK DAM REHABILITATION
MONTANA DEPARTMENT OF NATURAL RESOURCES & CONSERVATION
GRANITE COUNTY, MONTANA

GATE HOUSE BRIDGE PLAN & SECTION

MONTANA DNRC

PROJECT: 22270012.000
DATE: 4/1/2024
DRAWING NO. S-304
SHEET 88 OF 102

O:\BOISE\2022\22270012.000_EFRC DAM REHAB\03-SE PRODUCTS\08-CAD\STRI\S-304.DWG
3/18/2024 2:51 PM

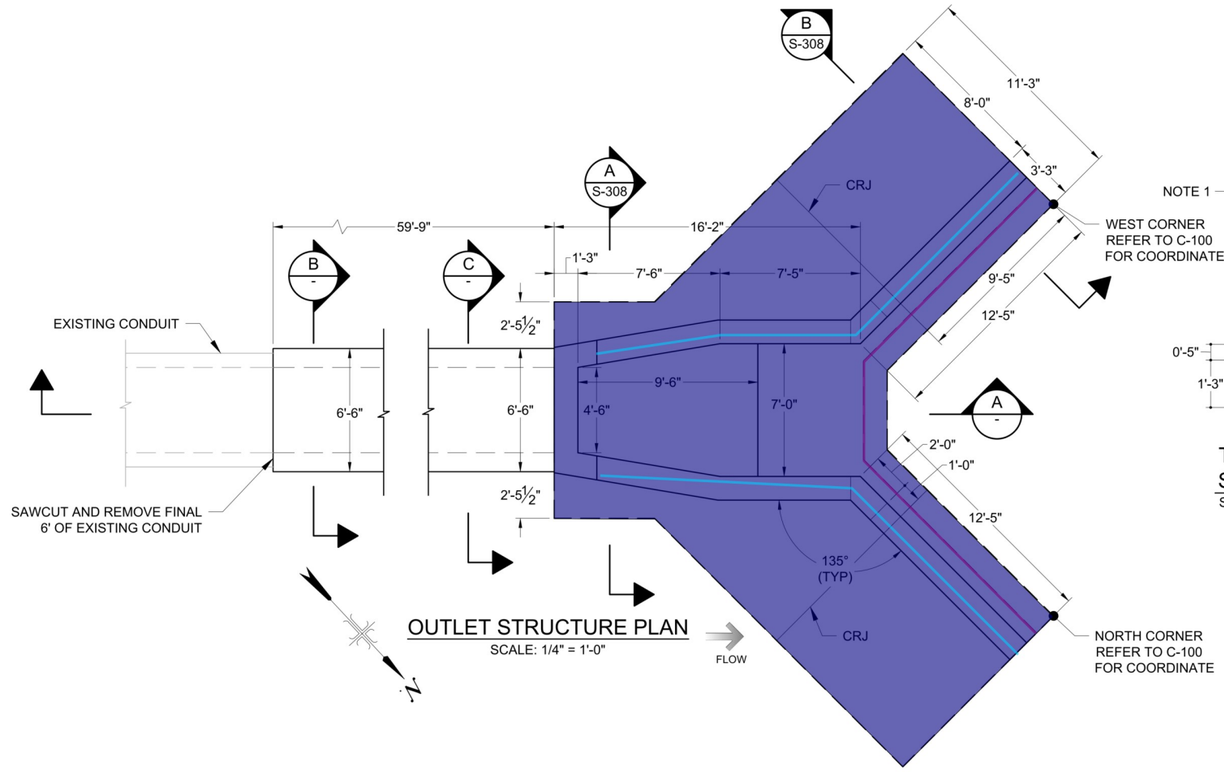

OUTLET STRUCTURE PLAN
SCALE: 1/4" = 1'-0"

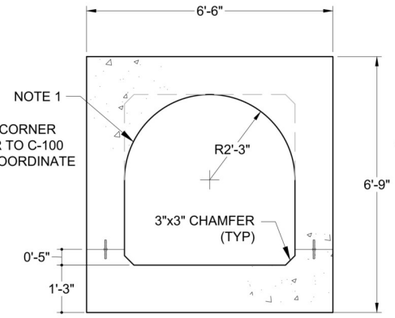

TRANSITION SECTION
STA 4+00 TO 4+06
SCALE: 1/2" = 1'-0"
B
-

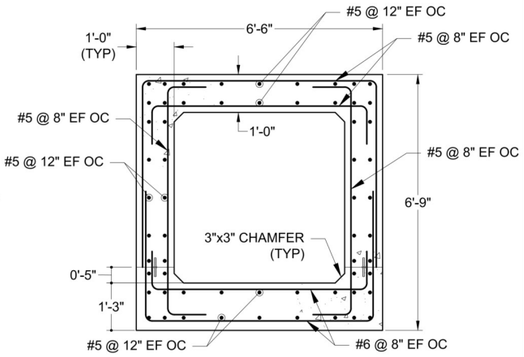

SECTION
SCALE: 1/2" = 1'-0"
C
-

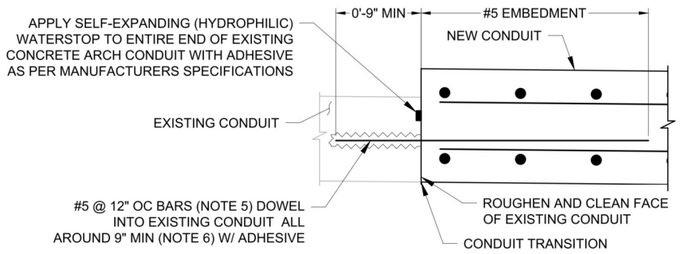

DETAIL
SCALE: 1 1/2" = 1'-0"
1
-
FLOW

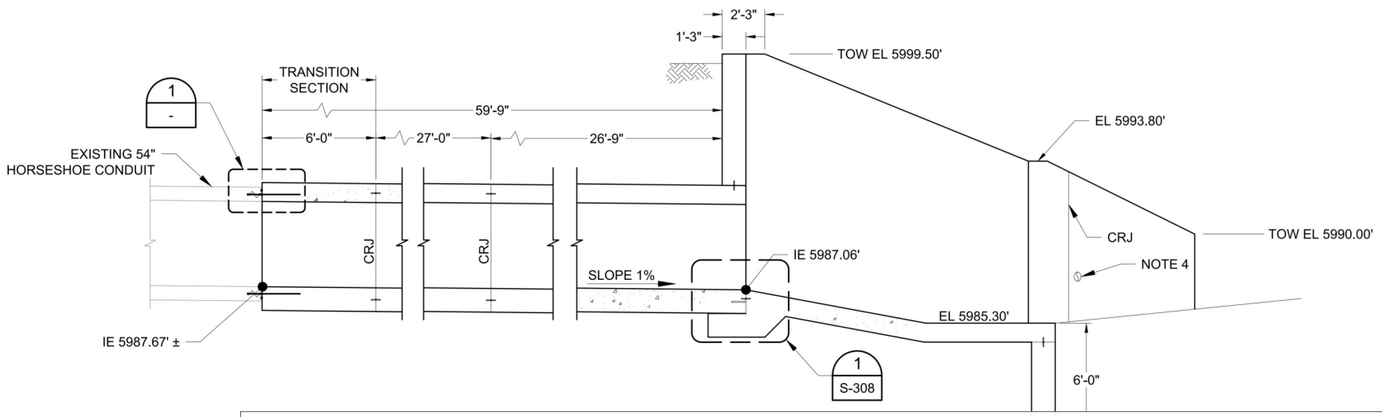

1'-3" Thk. Concrete Slab	503.3 SQ FT
(2'-0" W x 4'-0" D) Concrete Footing	31.0 FT
1'-3"Thk. Concrete Wall (10'-0" H)	51.6 FT

NOTES:

1. CONCRETE IN UPPER HAUNCHES OF TRANSITION SHALL MATCH THE EXISTING 54" HORSESHOE CONDUIT AT STA 4+00 AND TRANSITION TO MATCH 54" BOX CONDUIT AT STA 4+06.
2. FIELD VERIFY EXISTING STRUCTURE DIMENSIONS TO ENSURE FIT-UP WITH NEW CONSTRUCTION. REPORT ANY CONFLICTS TO ENGINEER FOR REVIEW.
3. REFER TO SHEET C-300 FOR GRADING AROUND STRUCTURES.
4. COORDINATE DRAINAGE AND PIPE PENETRATIONS WITH SHEET C-302.
5. DOWELS SHALL NOT INTERFERE WITH EXISTING REINFORCEMENT IN THE 9" THICK HORSESHOE CONDUIT WALL.
6. ALL ADHESIVE SHALL BE HILTI HIT-RE 500 V3 OR APPROVED EQUAL.
7. REFER TO DETAIL 217 ON SHEET S-003 FOR REINFORCEMENT SPLICE TABLE.
8. CONTRACTOR MAY SUBMIT AN ALTERNATE PRECAST CONCRETE CONDUIT DESIGN AS INDICATED ON THE BID FORM. THE CONDUIT DESIGN ALTERNATIVE (CAST-IN-PLACE OR PRE-CAST) WILL BE SELECTED UPON CONTRACT AWARD. SEE SPECIFICATION 03 42 13 FOR PRECAST CONCRETE REQUIREMENTS.

ISSUED FOR BID
NOT FOR CONSTRUCTION

REV.	DESCRIPTION	DATE

DESIGNED BY: SND
DRAWN BY: ELR
CHECKED BY: TJF

THOMAS J. FITZGERALD, PE
DATE: 3/19/2024
MT PROFESSIONAL ENGINEER NO. 48689

MONTANA THOMAS JEROME FITZGERALD No. 48689 PE LICENSED PROFESSIONAL ENGINEER

Schnabel ENGINEERING
348 W Parkcenter Blvd, Suite 200 / Boise, Id 83706
Phone: 208-331-9736
schnabel-eng.com

EAST FORK OF ROCK CREEK DAM REHABILITATION
MONTANA DEPARTMENT OF
NATURAL RESOURCES & CONSERVATION
GRANITE COUNTY, MONTANA

OUTLET STRUCTURE &
CONDUIT PLAN & SECTIONS

MONTANA DNRC

PROJECT: 22270012.000
DATE: 4/1/2024
DRAWING NO. S-307
SHEET 91 OF 102

O:\BOISE\2022\22270012.000_EFRC DAM REHAB\03-SE PRODUCTS\08-CAD\STRS-307.DWG
3/18/2024 2:52 PM

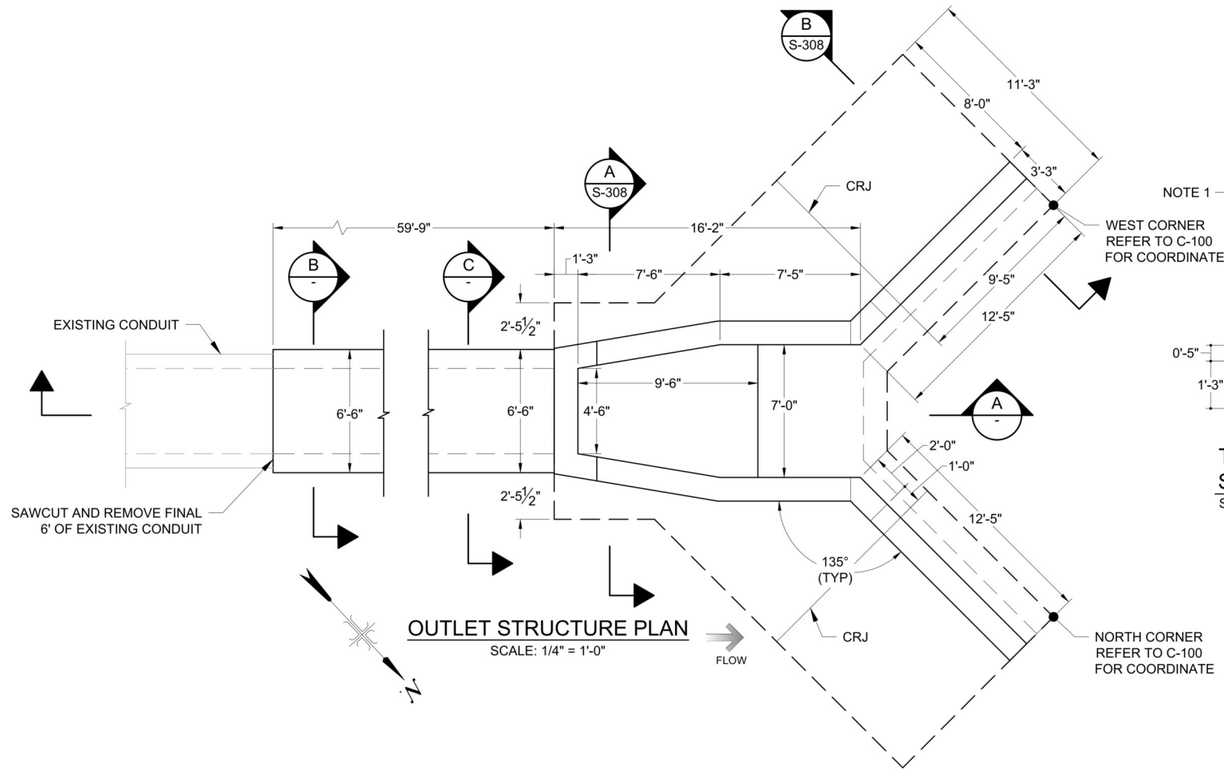

OUTLET STRUCTURE PLAN

SCALE: 1/4" = 1'-0"

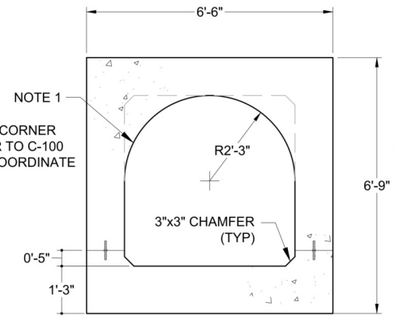

TRANSITION SECTION STA 4+00 TO 4+06

SCALE: 1/2" = 1'-0"

B
-

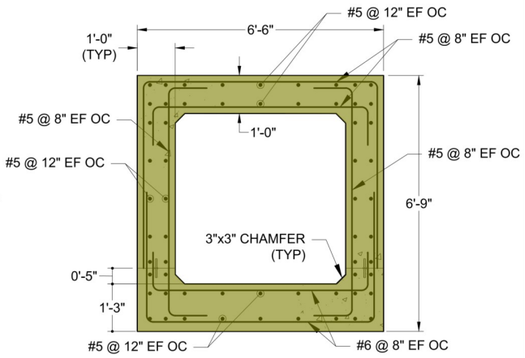

SECTION

SCALE: 1/2" = 1'-0"

C
-

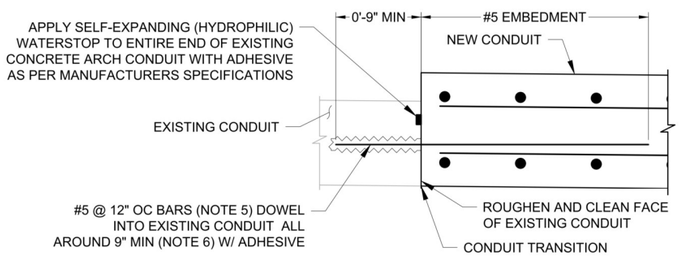

DETAIL

SCALE: 1 1/2" = 1'-0"

1
-
FLOW

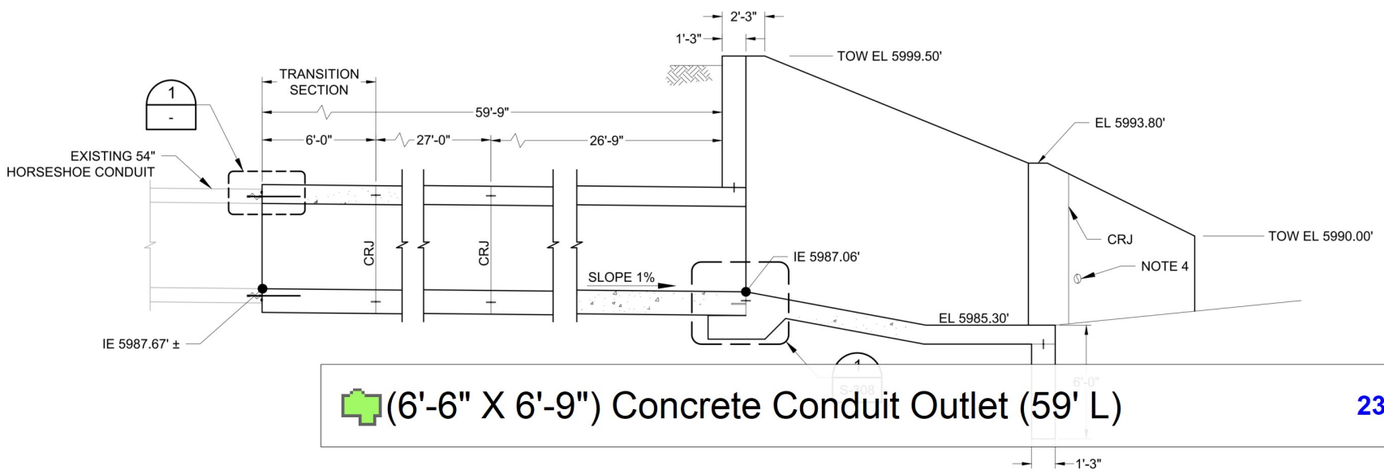

(6'-6" X 6'-9") Concrete Conduit Outlet (59' L) **23.8 SQ FT**

SECTION

SCALE: 1/4" = 1'-0"

A
-
FLOW

NOTES:

1. CONCRETE IN UPPER HAUNCHES OF TRANSITION SHALL MATCH THE EXISTING 54" HORSESHOE CONDUIT AT STA 4+00 AND TRANSITION TO MATCH 54" BOX CONDUIT AT STA 4+06.
2. FIELD VERIFY EXISTING STRUCTURE DIMENSIONS TO ENSURE FIT-UP WITH NEW CONSTRUCTION. REPORT ANY CONFLICTS TO ENGINEER FOR REVIEW.
3. REFER TO SHEET C-300 FOR GRADING AROUND STRUCTURES.
4. COORDINATE DRAINAGE AND PIPE PENETRATIONS WITH SHEET C-302.
5. DOWELS SHALL NOT INTERFERE WITH EXISTING REINFORCEMENT IN THE 9" THICK HORSESHOE CONDUIT WALL.
6. ALL ADHESIVE SHALL BE HILTI HIT-RE 500 V3 OR APPROVED EQUAL.
7. REFER TO DETAIL 217 ON SHEET S-003 FOR REINFORCEMENT SPLICE TABLE.
8. CONTRACTOR MAY SUBMIT AN ALTERNATE PRECAST CONCRETE CONDUIT DESIGN AS INDICATED ON THE BID FORM. THE CONDUIT DESIGN ALTERNATIVE (CAST-IN-PLACE OR PRE-CAST) WILL BE SELECTED UPON CONTRACT AWARD. SEE SPECIFICATION 03 42 13 FOR PRECAST CONCRETE REQUIREMENTS.

ISSUED FOR BID
NOT FOR CONSTRUCTION

REV.	DESCRIPTION	DATE

DESIGNED BY: SND
DRAWN BY: ELR
CHECKED BY: TJF

THOMAS J. FITZGERALD, PE
DATE: 3/19/2024
MT PROFESSIONAL ENGINEER NO. 48689

MONTANA PROFESSIONAL ENGINEER THOMAS JEROME FITZGERALD No. 48689 PE LICENSED

Schnabel ENGINEERING
348 W Parkcenter Blvd, Suite 200 / Boise, Id 83706
Phone: 208-331-9736
schnabel-eng.com

EAST FORK OF ROCK CREEK DAM REHABILITATION
MONTANA DEPARTMENT OF
NATURAL RESOURCES & CONSERVATION
GRANITE COUNTY, MONTANA

OUTLET STRUCTURE &
CONDUIT PLAN & SECTIONS

MONTANA DNRC

PROJECT: 22270012.000
DATE: 4/1/2024
DRAWING NO. S-307
SHEET 91 OF 102

O:\BOISE\2022\22270012.000_EFRC DAM REHAB\03-SE PRODUCTS\08-CAD\STRS-307.DWG
3/18/2024 2:52 PM